Data sheet

OpDAT HP 6xLC-D OS2 Prefab, without lock

P/N
1503507406-E
EAN 4251394602707
2026/10/12
Version: M

Illustrations

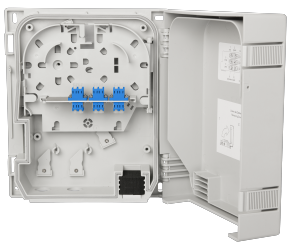

Dimensional drawing

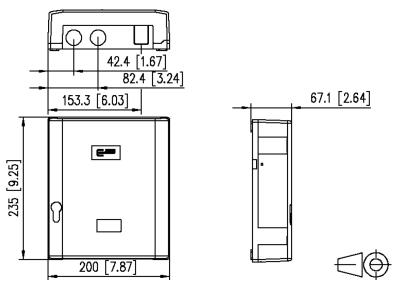

Cut-out

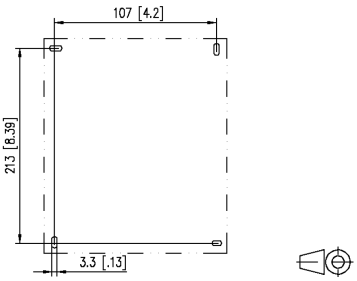

See enlarged drawings at the end of document

Product specification

- Fiber optic splice and distributor housing to be used as building transition point
- Equipped with LC-D adapters
- Accepts max. 12 pigtails or 2 Prefabs
- Cover locking by locking latch, can be sealed
- Cover can be very easily removed to facilitate mounting
- Splice tray for easy mounting and maintenance with a maximum of protection of the fibers with fiber transposition option and place to store fiber excess lengths
- Available with or without lock
- Strain relief for cables and patch cords
- With mounting and fastening option for gas and/or water blockers
- Patch cord output with flexible lamella seal
- Two cable entries for M20/25, one M20 cable gland included
- Fastening option for optical couplers
- Structured ASA (acrylic ester-styrene-acrylonitrile) in RAL 7035, extremely resistant plastic material, impact resistant and weatherproof
- Protection class according to IEC 60529: IP54
- Variants: equipped with up to 6 LC-D adapters, each in blue (OS2) or LC-D APC adapters, each in green (OS2)

© 2026 METZ CONNECT - Technische Änderungen vorbehalten! Subject to modifications! Sous réserve de modifications techniques!

METZ CONNECT GmbH | Im Tal 2 | 78176 Blumberg | Germany
Phone +49 7702 533-0 | Fax +49 7702 533-433 | info@metz-connect.com

OpDAT HP 6xLC-D OS2 Prefab, without lock

P/N
1503507406-E
EAN 4251394602707
2026/10/12
Version: M

Technical Data

General Data	
Fields of application	structured building cabling office areas data center
IP protection classes	IP54
Features variant	Prefab
Design	AP
Transmission technology	Fiber optic
Color housing	RAL 7035 - light gray
Adapter color	blue
Dimensions	
Dimension (L x W x H)	67.1 mm x 200 mm x 235 mm
Dimension (L x W x H)	2.642 in. x 7.874 in. x 9.252 in.
Weight	1050 g
Weight	2.3149 lb
Sealable	yes
Lockable	no

Connections/interfaces	
Adapter type	LC-D
Adapter interface outside	LC-D
Adapter interface inside	LC-D
Number of adapters	6
Number of breakouts front panel	6

Mechanical data	
Cut-out	SC-S/LC-D/E2000-S
Connector type	duplex
strain relief	yes

Materials and material properties	
Material - Sleeve	ceramic, slotted
Material - Coupler housing	Plastics
Material - Dust protection	PC (polycarbonate)
Halogen free	yes

© 2026 METZ CONNECT - Technische Änderungen vorbehalten! Subject to modifications! Sous réserve de modifications techniques!

OpDAT HP 6xLC-D OS2 Prefab, without lock

P/N
1503507406-E
EAN 4251394602707
2026/10/12
Version: M

Technical Data

Materials and material properties

REACH	compliant, 7439-92-1 – lead

Environmental conditions

Temperature (min. - max.)	
Temperature - Storage °C	-10 °C - 60 °C
Temperature - Storage °F	14 °F - 140 °F
Temperature - Operating °C	-5 °C - 60 °C
Temperature - Operating °F	23 °F - 140 °F
Temperature - Installation °C	-5 °C - 50 °C
Temperature - Installation °F	23 °F - 122 °F

Standards/Regulations

FO connector interfaces	IEC 61754-20

Classifications

ETIM 7.0	EC001409
ETIM 8.0	EC001409
ETIM 9.0	EC001409
ETIM 10.0	EC001409

Packing details

Type of packaging	1 pc(s) / box

Application note

This product is a standard product of METZ CONNECT. METZ CONNECT is not aware of the specific intended use of the goods by the Customer or any customers of the Customer. The Customer guarantees that it has fully and sufficiently tested the use of the goods and any product modifications, product changes or product enhancements with regard to the specific intended use in accordance with the state of the art or in any other way.

© 2026 METZ CONNECT - Technische Änderungen vorbehalten! Subject to modifications! Sous réserve de modifications techniques!

OpDAT HP 6xLC-D OS2 Prefab, without lock

P/N
1503507406-E
EAN 4251394602707
2026/10/12
Version: M

Illustrations

Dimensional drawing

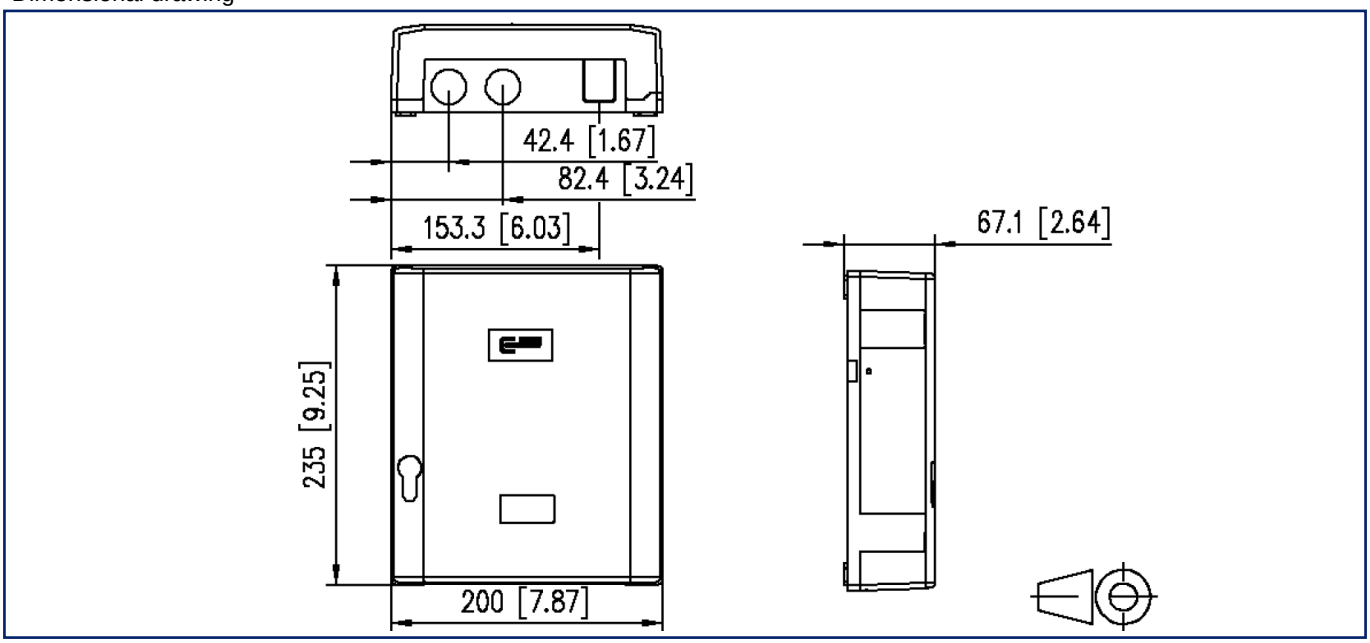

Cut-out

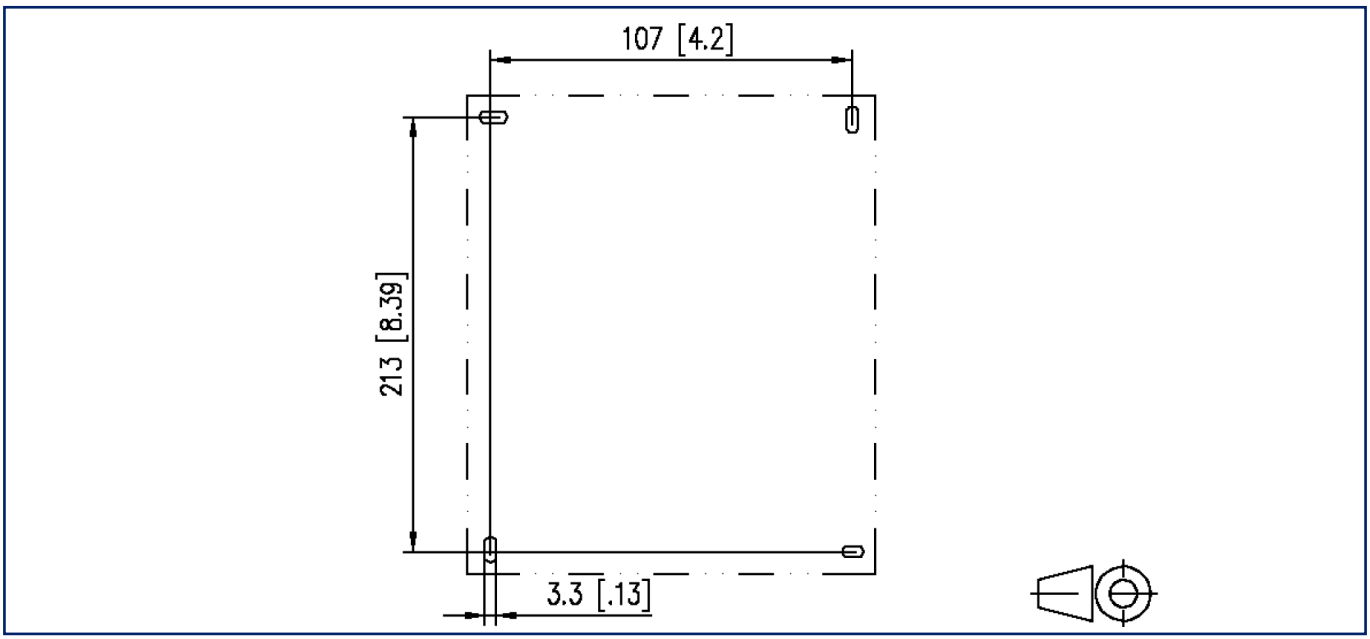

METZ CONNECT GmbH | Im Tal 2 | 78176 Blumberg | Germany
Phone +49 7702 533-0 | Fax +49 7702 533-433 | info@metz-connect.com

© 2026 METZ CONNECT - Technische Änderungen vorbehalten! Subject to modifications! Sous réserve de modifications techniques!