Data sheet

OpDAT patch cord LC-D APC/E2000-D APC OS2

P/N
151P1JAMAXXE

2026/09/17
Version: R

Illustrations

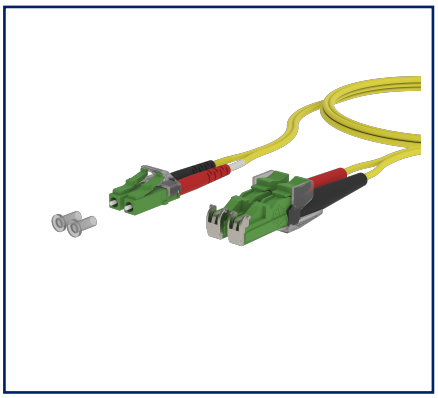

Dimensional drawing

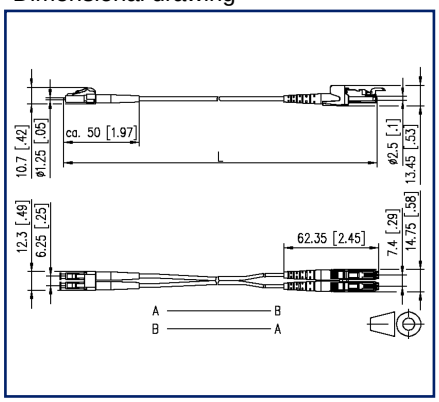

Principle diagram

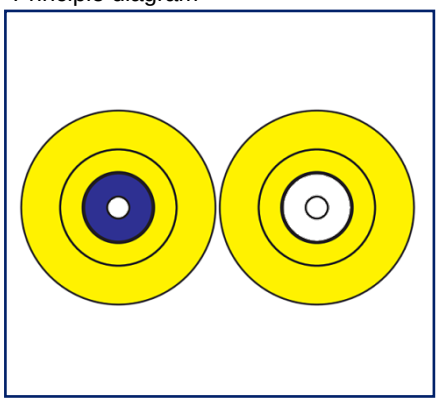

See enlarged drawings at the end of document

Product specification

- single mode patch cord I-V(ZN)H E9/125 OS2
- single mode fiber OS2, E9/125 µm, bend insensitive according to IEC 60793-2-50 type B6_a and B6_b and G.657.A2 and B2, compatible to G.652.D
- outer diameter 2.0 x 4.2 mm
- halogen-free LSHF-FR sheath with low smoke development, flame retardant
- duplex cord as zip-cord (figure 8) with two tight buffered fibers and aramide strain relief
- 100 % tested
- all available variants can be created with the cable configurator

© 2026 METZ CONNECT - Technische Änderungen vorbehalten! Subject to modifications! Sous réserve de modifications techniques!

METZ CONNECT GmbH | Im Tal 2 | 78176 Blumberg | Germany
Phone +49 7702 533-0 | Fax +49 7702 533-433 | info@metz-connect.com

OpDAT patch cord LC-D APC/E2000-D APC OS2

P/N
151P1JAMAXXE

2026/09/17
Version: R

Technical Data

General Data	
Fields of application	office areas data center
Mechanical measurement according to MICE	M1
Ingress measurement according to MICE	I1
Climatic measurement according to MICE	C1
Electromagnetic measurement according to MICE	E3
Design	patch cord
Transmission technology	Fiber optic
Wiring	crossed
Color	yellow
Mode type of the fiber	Singlemode
Fiber class	OS2
Cable Type	Duplex cable
Number of cables/ buffered fibers	2
Shape	APC (Angled Physical Contact)
Fiber construction	9/125 µm
Weight	8 kg/km

Connections/interfaces	
Connector technology interface 1	LC-D
Connector technology interface 2	E2000-D

Optical characteristics	
Insertion loss	max. 0,3 dB
Return loss	min. 65 dB
Mechanical data	
strain relief	aramide fibres
Maximum installation load	15 mm
Maximum installation load	0.591 in.

© 2026 METZ CONNECT - Technische Änderungen vorbehalten! Subject to modifications! Sous réserve de modifications techniques!

OpDAT patch cord LC-D APC/E2000-D APC OS2

P/N
151P1JAMAXXE

2026/09/17
Version: R

Technical Data

Materials and material properties	
Bend insensitivity	yes
Flame retardancy	yes
Halogen free	yes
RoHS	compliant

Environmental conditions	
Temperature (min. - max.)	
Temperature - Storage °C	-10 °C - 60 °C
Temperature - Storage °F	14 °F - 140 °F
Temperature - Operating °C	-10 °C - 60 °C
Temperature - Operating °F	14 °F - 140 °F
Temperature - Installation °C	-10 °C - 60 °C
Temperature - Installation °F	14 °F - 140 °F

Standards/Regulations	
Generic cabling systems	
General requirements	ISO/IEC 11801
Fibre optic connector interfaces	IEC 61754-20 / IEC 61754-15
Optical fibers: Indoor optical cables	
Sectional specification for classÂ B single-mode fibres	ISO/IEC 60793-2-50 type B6_a/B6_b
Optical fibers - Interconnecting devices and passive components - basic test and measuring methods	
Fibre optic interconnecting devices and passive components - Visual inspection of plug end face	IEC 61300-3-4 | IEC 61300-3-6
Test on gases evolved during combustion of materials from cables	
Determination of acidity (by measuring the pH value) and conductivity	IEC 60754-2
Tests on electric and optical fibre cables under fire conditions	
Test for vertical flame propagation for a single insulated wire or cable	IEC 60332-1
Test for vertical flame spread of vertically-mounted bunched wires or cables	ISO/IEC 60332-3-24
Measurement of smoke density of cables burning	ISO/IEC 61034
ITU-T standard	ITU-T G.657.A2 and G.657.B2, compatible with ITU-T G.652.D

© 2026 METZ CONNECT - Technische Änderungen vorbehalten! Subject to modifications! Sous réserve de modifications techniques!

OpDAT patch cord LC-D APC/E2000-D APC OS2

P/N
151P1JAMAXXE

2026/09/17
Version: R

Technical Data

Classifications

ETIM 7.0	EC001263
ETIM 8.0	EC001263

Packing details

Type of packaging	1 pc(s) / plastic bag

Application note

This product is a standard product of METZ CONNECT. METZ CONNECT is not aware of the specific intended use of the goods by the Customer or any customers of the Customer. The Customer guarantees that it has fully and sufficiently tested the use of the goods and any product modifications, product changes or product enhancements with regard to the specific intended use in accordance with the state of the art or in any other way.

© 2026 METZ CONNECT - Technische Änderungen vorbehalten! Subject to modifications! Sous réserve de modifications techniques!

Data sheet

OpDAT patch cord LC-D APC/E2000-D APC OS2

P/N
151P1JAMAXXE

2026/09/17
Version: R

Illustrations

Dimensional drawing

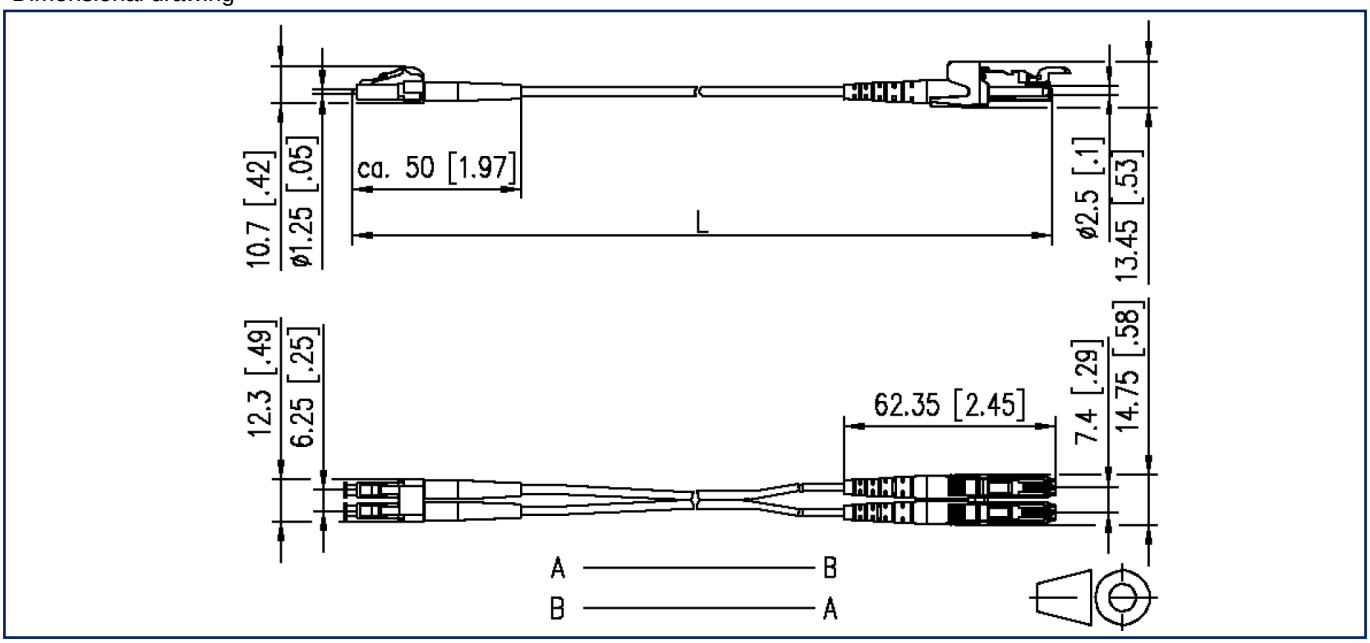

Principle diagram

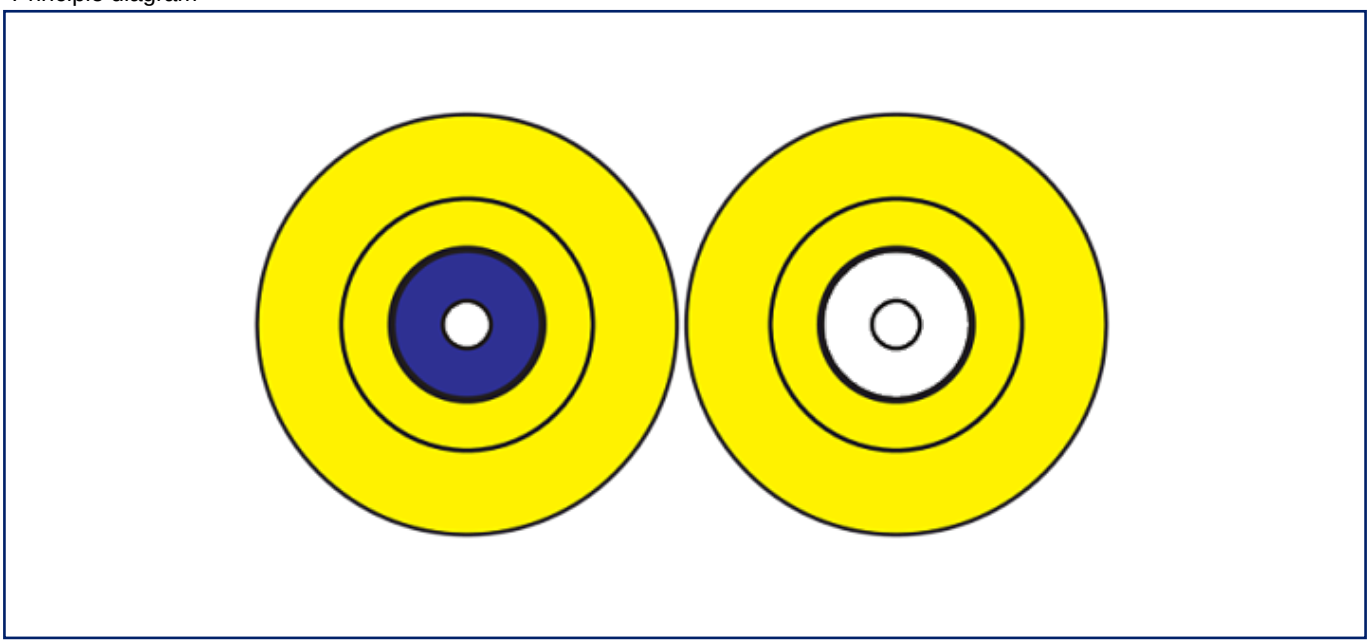

METZ CONNECT GmbH | Im Tal 2 | 78176 Blumberg | Germany
Phone +49 7702 533-0 | Fax +49 7702 533-433 | info@metz-connect.com
Weitere Dokumentation siehe / additional documentation see / documentation supplémentaire voir www.metz-connect.com

© 2026 METZ CONNECT - Technische Änderungen vorbehalten! Subject to modifications! Sous réserve de modifications techniques!