Data sheet

C6$_A$modul 3 port 270°M flush mounted trunking installation pure white

P/N
130B12D31102-E
EAN 4250184131946
2026/08/28
Version: AP

Illustrations

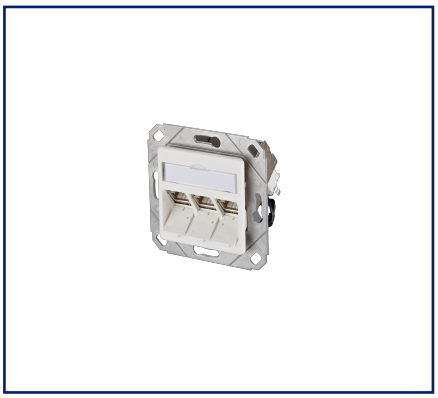

Dimensional drawing

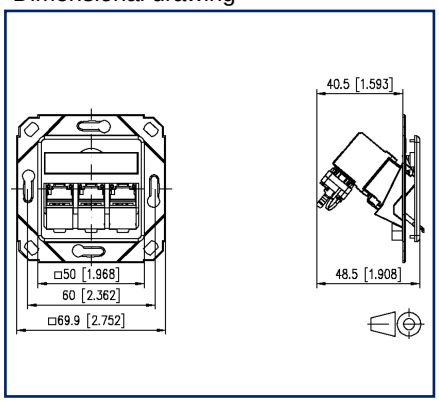

Wiring diagram

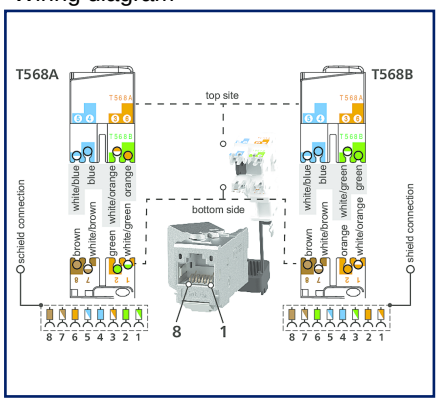

See enlarged drawings at the end of document

Product specification

Modular wall outlet for the construction of a passive network infrastructure with the highest quality requirements. The junction box is suitable for connecting telephones up to 10 Gbit networks and power supply with PoE with up to 90W. The very robust, nickel-plated zinc die-cast module, which consists of only two parts, can be connected by the installer very easily and in a very short time without any special tools. In addition to the permanent quality control during production, independent test laboratories confirm the very good quality of the individual modules with various certificates. The wall outlets are supplied in retail-friendly, separable cardboard packaging with 10 pieces each.

- variants, mounting type: AP, UP, UPk, UP0
- variants, number of ports: 1, 2, 3

© 2026 METZ CONNECT - Technische Änderungen vorbehalten! Subject to modifications! Sous réserve de modifications techniques!

C6$_A$modul 3 port 270°M flush mounted trunking installation pure white

P/N
130B12D31102-E
EAN 4250184131946
2026/08/28
Version: AP

Technical Data

General Data

Fields of application	structured building cabling office areas Distributed building services
Mechanical measurement according to MICE	M1
Ingress measurement according to MICE	I1
Climatic measurement according to MICE	C1
Electromagnetic measurement according to MICE	E2
Design	wall outlet
Mounting style	UPk
Mounting in standard flush-mounted and cavity wall cups	yes
Shielding	shielded
Transmission technology	Copper
Wiring	T568A, T568B
Color	pure white - RAL 9010
Compatible with design centerpieces of switch programs	minor limitation, see compatibility list
Dimensions	
Dimension (L x W x H)	48.5 mm x 80.5 mm x 80.5 mm
Dimension (L x W x H)	1.909 in. x 3.169 in. x 3.169 in.
Modularity	yes
Labeling option	label window with identification label
Marking option	by dust protection

Transmission characteristics

Category (ISO)	6_A
Class (ISO/IEC)	E_A
Category (TIA)	6A
Remote Powering	yes
PoE	IEEE 802.3af
PoE plus	IEEE 802.3at
UPoE	yes
4PPoE	IEEE 802.3bt
HDBaseT	yes

© 2026 METZ CONNECT - Technische Änderungen vorbehalten! Subject to modifications! Sous réserve de modifications techniques!

C6$_A$modul 3 port 270°M flush mounted trunking installation pure white

P/N
130B12D31102-E
EAN 4250184131946
2026/08/28
Version: AP

Technical Data

Transmission characteristics	
SAT-IP	yes
AVoverIP	yes
Transmission rate up to 100 MBit (Fast Ethernet)	IEEE 802.3bw
Transmission rate up to 1 GBit (Fast Ethernet)	IEEE 902.3ab
Transmission rate up to 10 GBit	IEEE 802.3an

Connections/interfaces	
Connector technology interface 1	IDC-connection
Connector technology interface 2	RJ45-jack
Number of ports interface 2	3
Number of positions/contacts interface 1	3 x 8
Number of positions/contacts interface 2	3 x 8P/8C
Number of ports with dust protection interface 2	3
Termination data, solid wire (min. - max.)	
Conductor cross section, solid wire	AWG 26/1 - AWG 22/1
Conductor cross section, solid wire	0.128 mm² - 0.324 mm²
Conductor diameter, solid wire (bare copper)	0.409 mm - 0.643 mm
Conductor diameter, solid wire (bare copper)	0.016 in. - 0.025 in.
Termination data, stranded wire (min. - max.)	
Conductor cross section, stranded wire	AWG 26/7 - AWG 22/7
Conductor cross section, stranded wire	0.141 mm² - 0.355 mm²
Conductor diameter, stranded wire (bare copper)	0.483 mm - 0.76 mm
Conductor diameter, stranded wire (bare copper)	0.019 in. - 0.03 in.
Cable sheath diameter (min. - max.)	
Cable sheath diameter	5.5 mm - 10
Cable sheath diameter	0.197 in. - 0.394
Module plug-in direction	45° downwards
Cable access/outlet	270°
Ground connection	Via M4 thread (screw not included!)

© 2026 METZ CONNECT - Technische Änderungen vorbehalten! Subject to modifications! Sous réserve de modifications techniques!

C6$_A$modul 3 port 270°M flush mounted trunking installation pure white

P/N
130B12D31102-E
EAN 4250184131946
2026/08/28
Version: AP

Technical Data

Electrical/ optical properties	
Current carrying capacity	max. 1 A at 60 °C
Rated voltage	max. 60 V DC
Rated voltage UL	max. 56.5 V DC
Contact resistance	max. 20 mOhm
Through resistance	max. 200 mOhm
Insulation resistance	min. 500 MOhm
Dielectric strength conductor-conductor (secondary)	max. 1000 V DC
Dielectric strength conductor-conductor, peak value (secondary)	max. 1.000 V AC
Dielectric strength conductor-shield	max. 1500 V DC
Dielectric strength conductor-shield, peak value	max. 1500 V AC
Mechanical data	
Cut-out	MC module
Insertion and withdrawal force	max. 30 N
Life - Number of mating cycles	min. 1000
Position/mounting of latch standard installation position	top
strain relief	latching clip

Materials and material properties	
Material - Housing	Plastics
Material - Cover part(s)	ABS
Material - Supporting frame	GD-Zn
Material - Module support	GD-Zn
Material - Label window	ABS, transparent
Material - Dust protection	ABS
Material - Contact	Spring steel
Material - Contact finish	AuCo
Material - Shield	CuSn6
Material - Shield finish	tinned
Material - Stuffer cap	PA 6.6 UL94 V0
Material - Strain relief	PA 6.6 UL94 V0
RoHS	compliant

© 2026 METZ CONNECT - Technische Änderungen vorbehalten! Subject to modifications! Sous réserve de modifications techniques!

C6$_A$modul 3 port 270°M flush mounted trunking installation pure white

P/N
130B12D31102-E
EAN 4250184131946
2026/08/28
Version: AP

Technical Data

Environmental conditions

Temperature (min. - max.)	
Temperature - Storage °C	-40 °C - 70 °C
Temperature - Storage °F	-40 °F - 158 °F
Temperature - Operating °C	-40 °C - 70 °C
Temperature - Operating °F	-40 °F - 158 °F
IP class	IP20

Certifications

GHMT PVP		yes

Standards/Regulations

Generic cabling systems	
General requirements	ISO/IEC 11801-1:2017-11 | DIN EN 50173-1:2018-10 ANSI/TIA-568.2-D
Office buildings	ISO/IEC 11801-2:2017-11 | DIN EN 50173-2:2018-10 ANSI/TIA-568.2-D
Living units	ISO/IEC 11801-4:2017-11 | DIN EN 50173-4:2018-10 ANSI/TIA-570-D
Distributed building services	ISO/IEC 11801-6:2017-11 | DIN EN 50173-6:2018-10 ANSI/TIA-862-B
Connectors for electronic equipment	
Free and fixed connectors	DIN EN 60603-7-51:2011-01, DIN EN 60603-7:2019-11, DIN EN 60603-7-1:2012-01
Connectors for electronic equipment - Tests and measurements	
Test standard for connectors (engaging and separating connectors under electrical load)	DIN-EN 60512-99-001, DIN-EN 60512-99-002
Endurance tests	DIN EN 60603-7:2019-11, DIN EN 60603-7-1:2012-01
Degrees of Protection Provided by Enclosures	IEC 60529
Climate tests	DIN EN 60603-7:2019-11, DIN EN 60603-7-1:2012-01
Cover plates for installation devices 1	DIN 49075-1:1989-10
Cover plates for installation devices 2	DIN 49075-2:1989-10

© 2026 METZ CONNECT - Technische Änderungen vorbehalten! Subject to modifications! Sous réserve de modifications techniques!

C6$_A$modul 3 port 270°M flush mounted trunking installation pure white

P/N
130B12D31102-E
EAN 4250184131946
2026/08/28
Version: AP

Technical Data

Classifications

ETIM 7.0	EC001264
ETIM 8.0	EC001264
ETIM 9.0	EC001264
ETIM 10.0	EC001264

Packing details

Type of packaging	10 pc(s) / box

Application note

This product is a standard product of METZ CONNECT. METZ CONNECT is not aware of the specific intended use of the goods by the Customer or any customers of the Customer. The Customer guarantees that it has fully and sufficiently tested the use of the goods and any product modifications, product changes or product enhancements with regard to the specific intended use in accordance with the state of the art or in any other way.

© 2026 METZ CONNECT - Technische Änderungen vorbehalten! Subject to modifications! Sous réserve de modifications techniques!

C6$_A$modul 3 port 270°M flush mounted trunking installation pure white

P/N
130B12D31102-E
EAN 4250184131946
2026/08/28
Version: AP

Accessories

P/N	Designation
130829-4302-I	Surface mount frame 85 x 85 x 43 mm - single, pure white
1308895010-I	T-Slot mounting bracket for wall outlets - horizontal mounting without 50 mm, separation cup
1308895011-I	T-Slot mounting bracket for wall outlets - horizontal mounting 50 mm, with separation cup
1308895020-I	DIN Rail mounting bracket for wall outlets - horizontal mounting 50 mm, without separation cup
1308895021-I	DIN Rail mounting bracket for wall outlets - horizontal mounting 50 mm, with separation cup
1308895040-I	T-Slot mounting bracket for wall outlets - vertical mounting 50 mm, without separation cup
1308895041-I	T-Slot mounting bracket for wall outlets - vertical mounting 50 mm, with separation cup
1308895220-I	DIN rail mounting bracket for wall outlets - horizontal mounting 52 mm, without separation cup
1308895221-I	DIN rail mounting bracket for wall outlets - horizontal mounting 52 mm, with separation cup
1308895510-I	T-Slot mounting bracket for wall outlets - horizontal mounting 55 mm, without separation cup
1308895511-I	T-Slot mounting bracket for wall outlets - horizontal mounting 55 mm, with separation cup
1308895520-I	DIN rail mounting bracket for wall outlets - horizontal mounting 55 mm, without separation cup
1308895521-I	DIN rail mounting bracket for wall outlets - horizontal mounting 55 mm, with separation cup
1308895540-I	T-Slot mounting bracket for wall outlets - vertical mounting 55 mm, without separation cup
1308895541-I	T-Slot mounting bracket for wall outlets - vertical mounting 55 mm, with separation cup
130889ADTK-I	Mounting bracket ADTK for OBO
130889ADTSA-I	Mounting bracket ADTSA for OBO
130889FKH-I	Mounting bracket FR for Kleinhuis
130889FNI-I	Mounting bracket FR for Niedax
130889FTE-I	Mounting bracket FR for Tehalit
820394-0105-I	Dust protection covers for wall outlets yellow
820394-0106-I	Dust protection covers for wall outlets blue
820394-0107-I	Dust protection covers for wall outlets green
820394-0108-I	Dust protection covers for wall outlets red

© 2026 METZ CONNECT - Technische Änderungen vorbehalten! Subject to modifications! Sous réserve de modifications techniques!

C6$_A$modul 3 port 270°M flush mounted trunking installation pure white

P/N
130B12D31102-E
EAN 4250184131946
2026/08/28
Version: AP

Accessories

820395-0102-I	Cover plate 80 x 80 mm, pure white, module
899650-01	Label sheet for wall outlets

© 2026 METZ CONNECT - Technische Änderungen vorbehalten! Subject to modifications! Sous réserve de modifications techniques!

Data sheet

C6$_A$modul 3 port 270°M flush mounted trunking installation pure white

P/N
130B12D31102-E
EAN 4250184131946
2026/08/28
Version: AP

Illustrations

Dimensional drawing

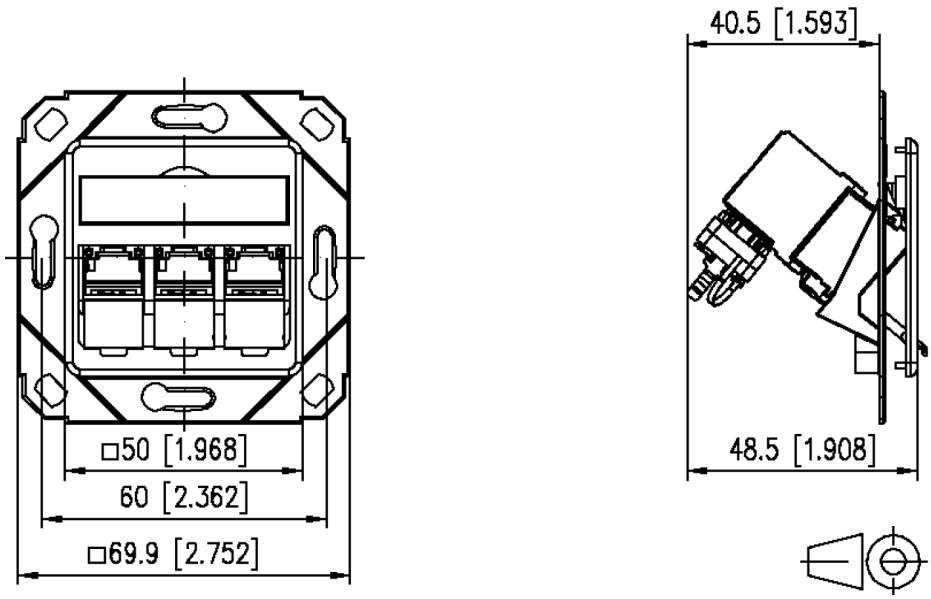

Wiring diagram

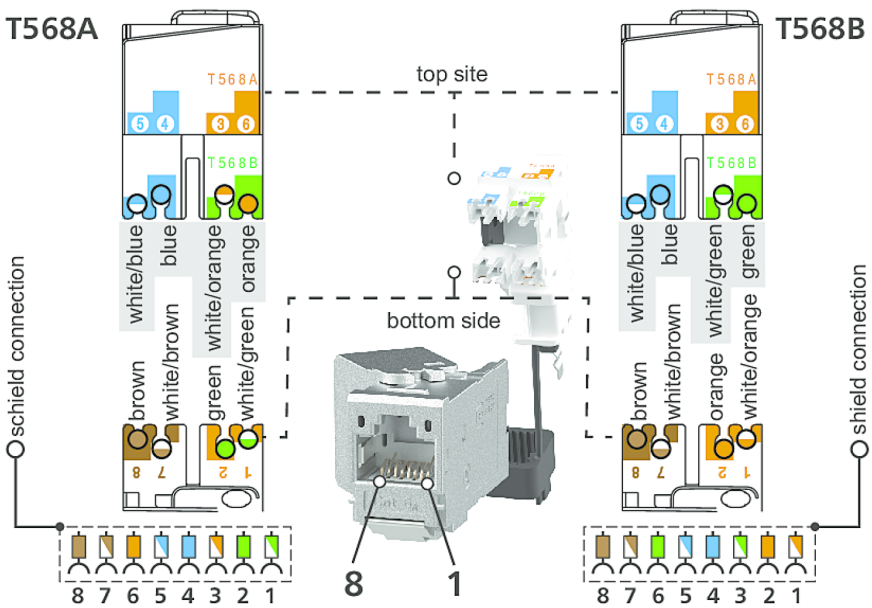

METZ CONNECT GmbH | Im Tal 2 | 78176 Blumberg | Germany
Phone +49 7702 533-0 | Fax +49 7702 533-433 | info@metz-connect.com
Weitere Dokumentation siehe / additional documentation see / documentation supplémentaire voir www.metz-connect.com

© 2026 METZ CONNECT - Technische Änderungen vorbehalten! Subject to modifications! Sous réserve de modifications techniques!