Data sheet

M12 Industrial Ethernet cable, X-coded, 10.0 m, RJ45 plug straight - M12 plug angled, coding at 135°, PUR

P/N
142M2X5B100
EAN 4251394645568
2026/09/09
Version: I

Illustrations

Dimensional drawing

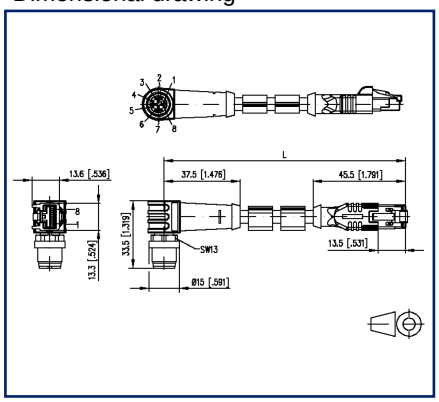

Wiring diagram

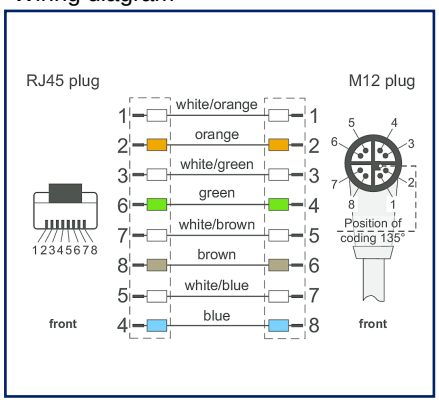

See enlarged drawings at the end of document

Product specification

Shielded PUR cable for safe and industrial data transmission in automation and fieldbus technology. The cable meets the requirements of ULStyle 20963 and complies with Cat7 (electrical properties based on EN50288-4-2). Materials and design allow increased mechanical stress (abrasion, bending, vibration, etc.) of the cable. Special properties: UL style 20963, seawater resistant, recyclable, LABS free, RoHs compliant, acid and alkali resistant, UV resistant, hydrolysis resistant, halogen free, oil resistant, high flexibility, no corrosive gases, microbe resistant, no fire propagation.

- Standard variants: 1.0 m, 2.0 m, 5.0 m, 10.0 m.
- Other cable lengths on request.

© 2026 METZ CONNECT - Technische Änderungen vorbehalten! Subject to modifications! Sous réserve de modifications techniques!

M12 Industrial Ethernet cable, X-coded, 10.0 m, RJ45 plug straight - M12 plug angled, coding at 135°, PUR

P/N
142M2X5B100
EAN 4251394645568
2026/09/09
Version: I

Technical Data

General Data	
Fields of application	Industrial Ethernet harsh environment
Design	Ethernet-Connection line
Shielding	shielded
Transmission technology	Copper
Cable Type	S/FTP
Number of twisting elements	4
Twisting element	Pair
Wiring	T568B
Color coding fiber/ wire(s)	white/orange, orange, white/green, green, white/brown, brown, white/blue, blue
Color	green
Dimensions	
Dimension - Interface 1 (L x W x H)	45.5 mm x 13.3 mm x 13.6 mm
Dimension - Interface 1 (L x W x H)	1.791 in. x 0.524 in. x 0.535 in.
Dimension - Interface 2 (L x W x H)	33.5 mm x 15 mm x 45 mm
Dimension - Interface 2 (L x W x H)	1.319 in. x 0.591 in. x 1.772 in.
Cable length (m)	10 m
Cable length (ft)	32.81 ft
Labeling option	identification label carrier

Transmission characteristics	
Category (ISO)	6_A

Connections/interfaces	
Connector technology interface 1	RJ45 plug
Connector technology interface 2	M12-plug angled
Coding interface 2	X-coded
Number of positions/contacts interface 1	8P/8C
Number of positions/contacts interface 2	8

© 2026 METZ CONNECT - Technische Änderungen vorbehalten! Subject to modifications! Sous réserve de modifications techniques!

M12 Industrial Ethernet cable, X-coded, 10.0 m, RJ45 plug straight - M12 plug angled, coding at 135°, PUR

P/N
142M2X5B100
EAN 4251394645568
2026/09/09
Version: I

Technical Data

Connections/interfaces	
Termination data, stranded wire (min. - max.)	
Conductor cross section, stranded wire	AWG 26/7
Conductor diameter, stranded wire (bare copper)	0.48 mm
Conductor diameter, stranded wire (bare copper)	0.019 in.
Cable sheath diameter (min. - max.)	
Cable sheath diameter	6.4 mm
Cable sheath diameter	0.236 in.

Electrical characteristics	
Current carrying capacity	0.5 A at 40 °C
Rated voltage	60 V DC
Insulation resistance	min. 100 MOhm
Mechanical data	
Bending radius without load	min. 64 mm
Maximum operating bending radius	64 mm
Maximum operating bending radius	2.52 in.
Maximum installation load	32 mm
Maximum installation load	1.26 in.
Shielding braid coverage	70 %

Materials and material properties	
Cable	
Material - Conductor	Cu (copper)
Material - Conductor Insulation	Polyethylene
Material - Cable jacket	PUR
Flame retardancy	yes
Interface 1	
Material - Body interface 1	Plastics
Material - Contact interface 1	CuZnPb (brass)
Material - Contact finish interface 1	Au (gold)
Material - Contact carriers interface 1	Plastics

© 2026 METZ CONNECT - Technische Änderungen vorbehalten! Subject to modifications! Sous réserve de modifications techniques!

M12 Industrial Ethernet cable, X-coded, 10.0 m, RJ45 plug straight - M12 plug angled, coding at 135°, PUR

P/N
142M2X5B100
EAN 4251394645568
2026/09/09
Version: I

Technical Data

Materials and material properties	
Interface 2	
Material - Body interface 2	Plastics
Material - Contact interface 2	CuZnPb (brass)
Material - Contact finish interface 2	Au (gold)
Material - Contact carriers interface 2	Plastics
Material - Union nut interface 2	CuZnPb (brass)
Material - Union nut finish interface 2	Ni (nickel)
Material - Pair shield	plastic film
Material - Pair shield finish	Al (Aluminium)
Material - Main shield	Cu (copper) braid
Material - Main shield finish	Sn
Oil resistance	yes
UV-resistance	yes
RoHS	compliant

Environmental conditions	
Temperature (min. - max.)	
Temperature - Operating °C	-40 °C - 80 °C
Temperature - Operating °F	-40 °F - 176 °F
Particulate ingress interface 1	IP2X when plugged in
Liquid ingress/immersion interface 1	IPX0 when plugged in
Particulate ingress interface 2	IP6X when plugged in
Liquid ingress/immersion interface 2	IPX5, IPX7 when plugged in
Pollution degree interface 1	1
Pollution degree interface 2	2
Approvals	
UL listed (file no.)	Approval pending

© 2026 METZ CONNECT - Technische Änderungen vorbehalten! Subject to modifications! Sous réserve de modifications techniques!

M12 Industrial Ethernet cable, X-coded, 10.0 m, RJ45 plug straight - M12 plug angled, coding at 135°, PUR

P/N
142M2X5B100
EAN 4251394645568
2026/09/09
Version: I

Technical Data

Standards/Regulations	
Generic cabling systems	
General requirements	ISO/IEC 11801-1 | DIN EN 50173-1
Profinet	yes
Connectors for electronic equipment	
Free and fixed connectors	IEC 60603-7-51
circular connector	DIN EN 61076-2-109
Multi-element metallic cables used in analogue and digital communication and control	DIN EN 50288-4-2
Test for vertical flame propagation for a single insulated wire or cable	IEC 60332-1-2
Measurement of smoke density of cables burning	IEC 61034
Determination of the halogen acid gas content	IEC 60754-1
Insulating and sheathing materials of cables and insulated wire - General test methods	DIN EN 60811-2-1
Copper and copper alloys - Drawn round copper wire for the production of electrical conductors	DIN EN 13602 Cu-ETP-A... | DIN EN 13602 Cu-ETP-A...-B

Classifications	
ETIM 7.0	EC002599
ETIM 8.0	EC002599
ETIM 9.0	EC002599
ETIM 10.0	EC002599

Packing details	
Type of packaging	1 pc(s) / plastic bag

Application note

This product is a standard product of METZ CONNECT. METZ CONNECT is not aware of the specific intended use of the goods by the Customer or any customers of the Customer. The Customer guarantees that it has fully and sufficiently tested the use of the goods and any product modifications, product changes or product enhancements with regard to the specific intended use in accordance with the state of the art or in any other way.

© 2026 METZ CONNECT - Technische Änderungen vorbehalten! Subject to modifications! Sous réserve de modifications techniques!

M12 Industrial Ethernet cable, X-coded, 10.0 m, RJ45 plug straight - M12 plug angled, coding at 135°, PUR

P/N
142M2X5B100
EAN 4251394645568
2026/09/09
Version: I

Illustrations

Dimensional drawing

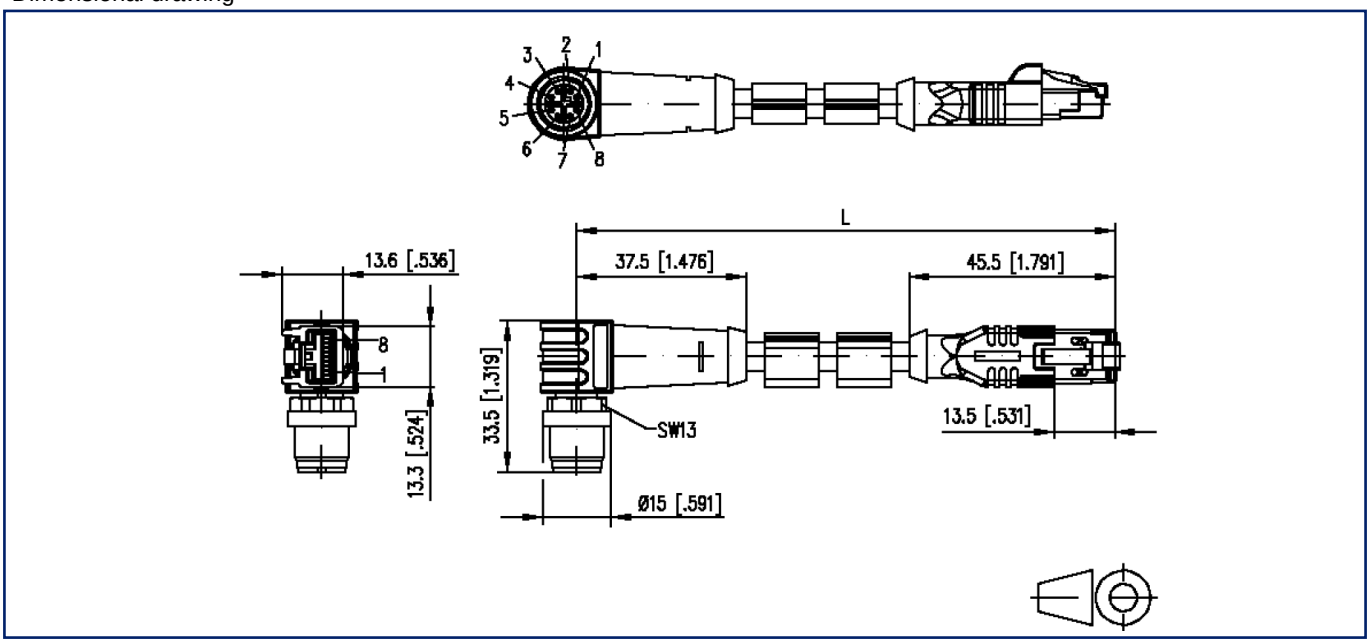

Wiring diagram

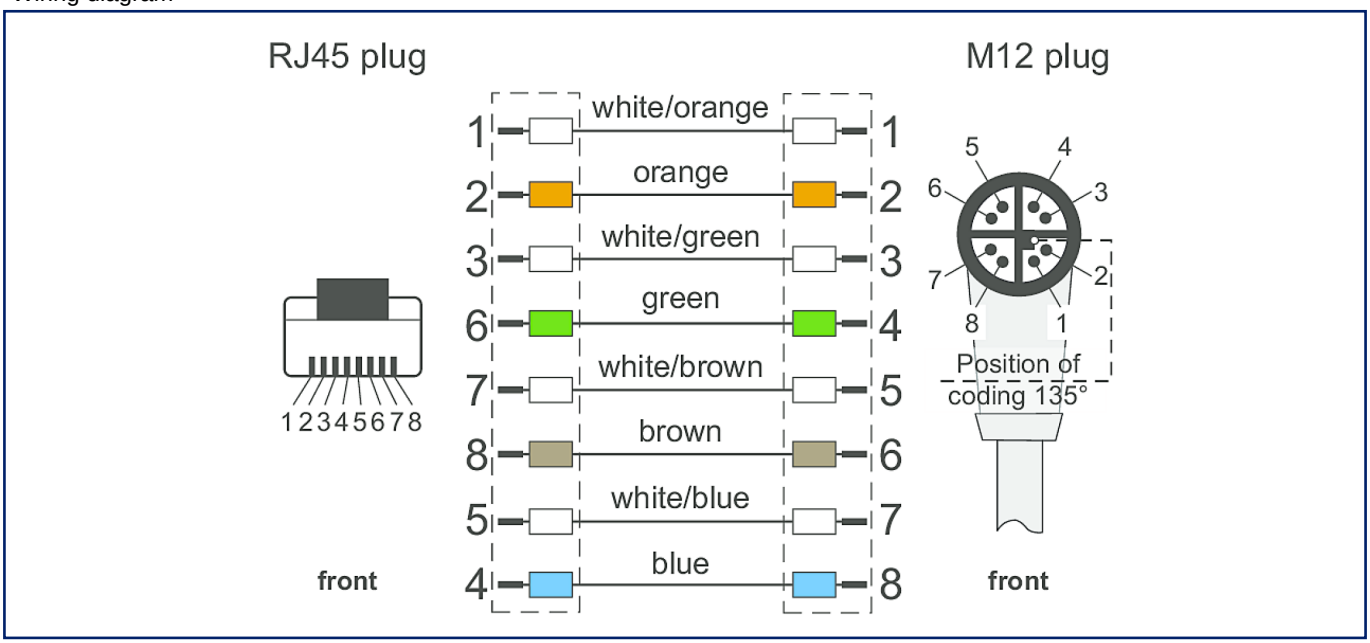

© 2026 METZ CONNECT - Technische Änderungen vorbehalten! Subject to modifications! Sous réserve de modifications techniques!

M12 Industrial Ethernet cable, X-coded, 10.0 m, RJ45 plug straight - M12 plug angled, coding at 135°, PUR

P/N
142M2X5B100
EAN 4251394645568
2026/09/09
Version: I

Illustrations

Principle diagram

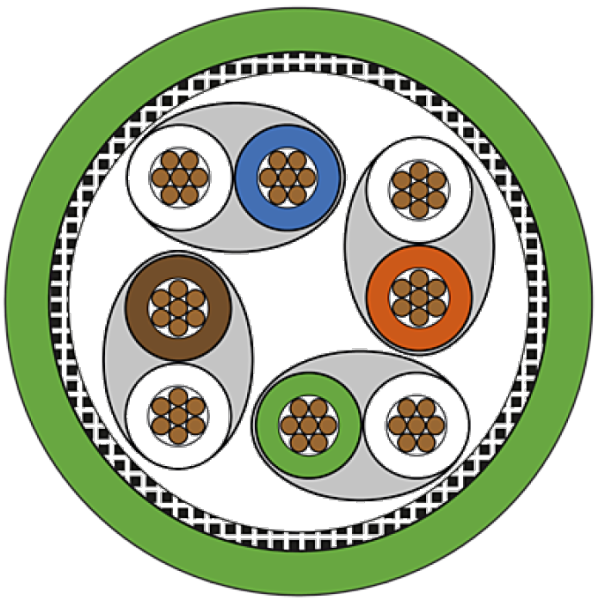

© 2026 METZ CONNECT - Technische Änderungen vorbehalten! Subject to modifications! Sous réserve de modifications techniques!