Data sheet

OpDAT modul LC-Duplex OM5

P/N
1509107M-I
EAN 4251394608303
2025/09/18
Version: J

Illustrations

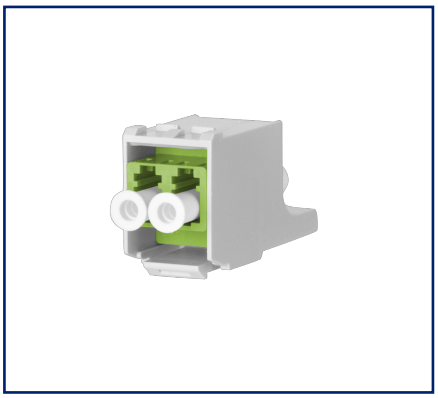

Dimensional drawing

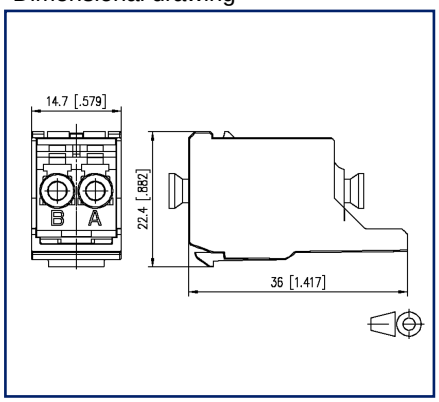

Cut-out

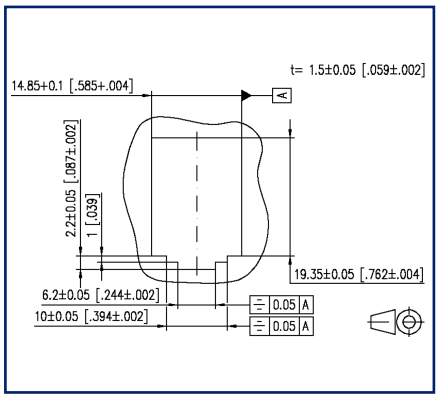

See enlarged drawings at the end of document

Product specification

- LC duplex adapters with adapter, fits Modul applications
- slotted ceramic sleeve for single mode and multi mode applications
- perfect for Fiber-to-the-desk solutions
- service life min. 1000 mating cycles
- Variants: blue (OS2), lime green (OM5), violet (OM4), aqua (OM3), beige (OM2) or green (SM APC)

© 2025 METZ CONNECT - Technische Änderungen vorbehalten! Subject to modifications! Sous réserve de modifications techniques!

METZ CONNECT GmbH | Im Tal 2 | 78176 Blumberg | Germany
Phone +49 7702 533-0 | Fax +49 7702 533-433

Data sheet
OpDAT modul LC-Duplex OM5

P/N
1509107M-I
EAN 4251394608303
2025/09/18
Version: J

Technical Data

General Data	
Fields of application	fiber to the desk
Mechanical measurement according to MICE	M1
Ingress measurement according to MICE	I1
Climatic measurement according to MICE	C1
Electromagnetic measurement according to MICE	E3
Design	coupler / adapter (FO)
Transmission technology	Fiber optic
Color	lime green
Dimensions	
Dimension (L x W x H)	36 mm x 14.7 mm x 22.4 mm
Dimension (L x W x H)	1.417 in. x 0.579 in. x 0.882 in.
Modularity	yes
Mode type of the fiber	Multimode
Labeling option	on housing

Connections/interfaces	
Connector interfaces	LC

Mechanical data	
Cut-out	SC, LC-D, E2000
Connector type	duplex
Mounting method	snap-in function
Life - Number of mating cycles	min. 1000
Position/mounting of latch standard installation position	top

Materials and material properties	
Material - Housing	Plastics
Material - Sleeve	ceramic, slotted
Halogen free	yes
RoHS	compliant

© 2025 METZ CONNECT - Technische Änderungen vorbehalten! Subject to modifications! Sous réserve de modifications techniques!

OpDAT modul LC-Duplex OM5

P/N
1509107M-I
EAN 4251394608303
2025/09/18
Version: J

Technical Data

Standards/Regulations	
Fibre optic connector interfaces	LC - IEC 61754-20

Classifications	
ETIM 7.0	EC000752
ETIM 8.0	EC000752
ETIM 9.0	EC000752
ETIM 10.0	EC000752

Packing details	
Type of packaging	10 pc(s) / box

Application note

This product is a standard product of METZ CONNECT. METZ CONNECT is not aware of the specific intended use of the goods by the Customer or any customers of the Customer. The Customer guarantees that it has fully and sufficiently tested the use of the goods and any product modifications, product changes or product enhancements with regard to the specific intended use in accordance with the state of the art or in any other way. At METZ CONNECT's request, the Customer shall submit and make available meaningful evidence (e.g. test and laboratory protocols, certifications, etc.).

© 2025 METZ CONNECT - Technische Änderungen vorbehalten! Subject to modifications! Sous réserve de modifications techniques!

P/N
1509107M-I
EAN 4251394608303
2025/09/18
Version: J

Accessories from

P/N	Designation
130927-1200-E	SmartConnect Patchpanel 12 ports MC module
130927-1200KE	SmartConnect Patchpanel 12 port Keystone, unequipped
130927-1600-E	SmartConnect Patchpanel 16 ports MC module
130927-2400-E	SmartConnect Patchpanel 24 ports MC module
14040000-E	MCO IP69k protective housing for outdoor use, set for exposed installation
14040010-E	MCO IP69k Protective housing for outdoor use, set with mounting bracket
14040100-E	MCO IP69k Protective housing for outdoor use, set wall/ housing bushing
1503600RJ00-B	OpDAT MV hybrid 12xmodule cutouts unequipped IP65
1503600RJ00-E	OpDAT MV hybrid 12xmodule cutouts unequipped IP54
15036ZRJ00-E	OpDAT MV patch panel 12xmodule cutouts unequipped

© 2025 METZ CONNECT - Technische Änderungen vorbehalten! Subject to modifications! Sous réserve de modifications techniques!

OpDAT modul LC-Duplex OM5

P/N
1509107M-I
EAN 4251394608303
2025/09/18
Version: J

Illustrations

Dimensional drawing

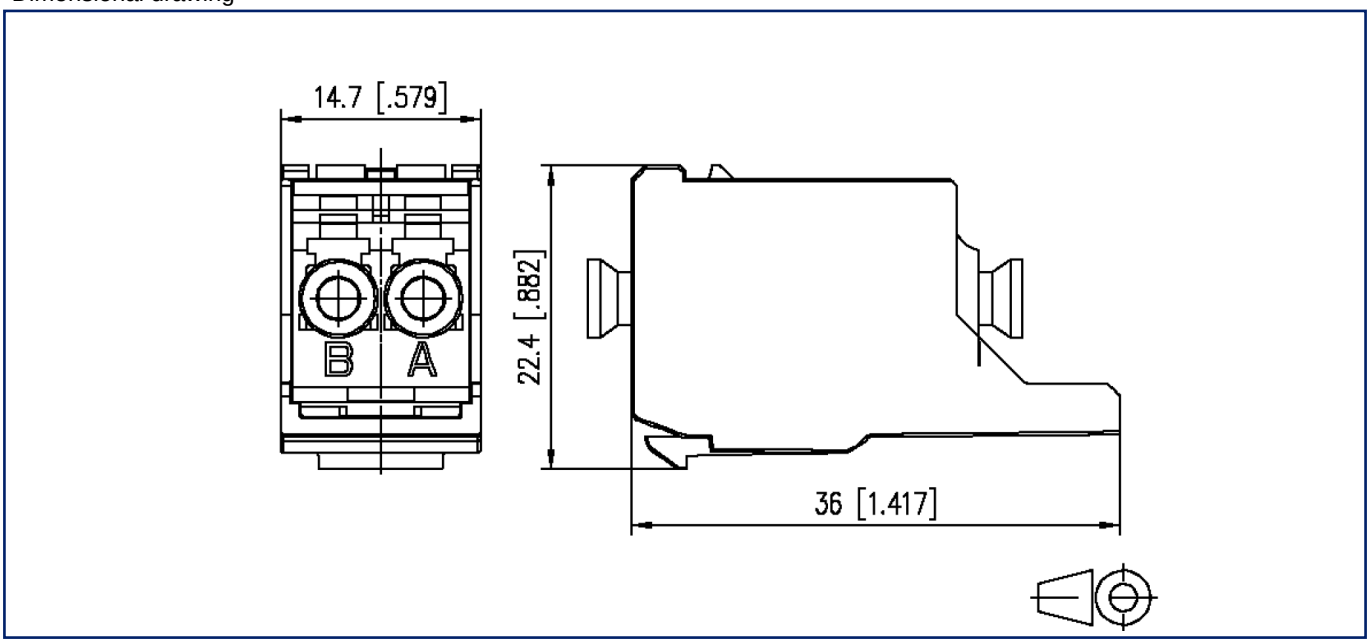

Cut-out

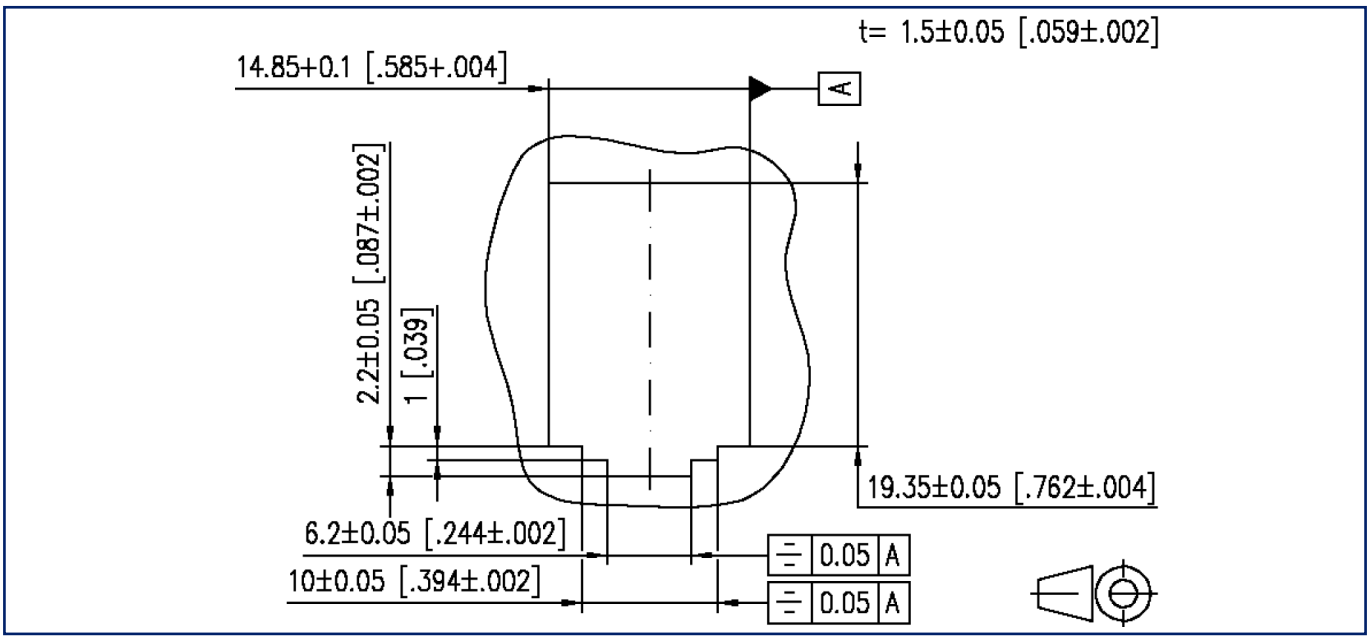

© 2025 METZ CONNECT - Technische Änderungen vorbehalten! Subject to modifications! Sous réserve de modifications techniques!

P/N
1509107M-I
EAN 4251394608303
2025/09/18
Version: J

Illustrations

Cut-out

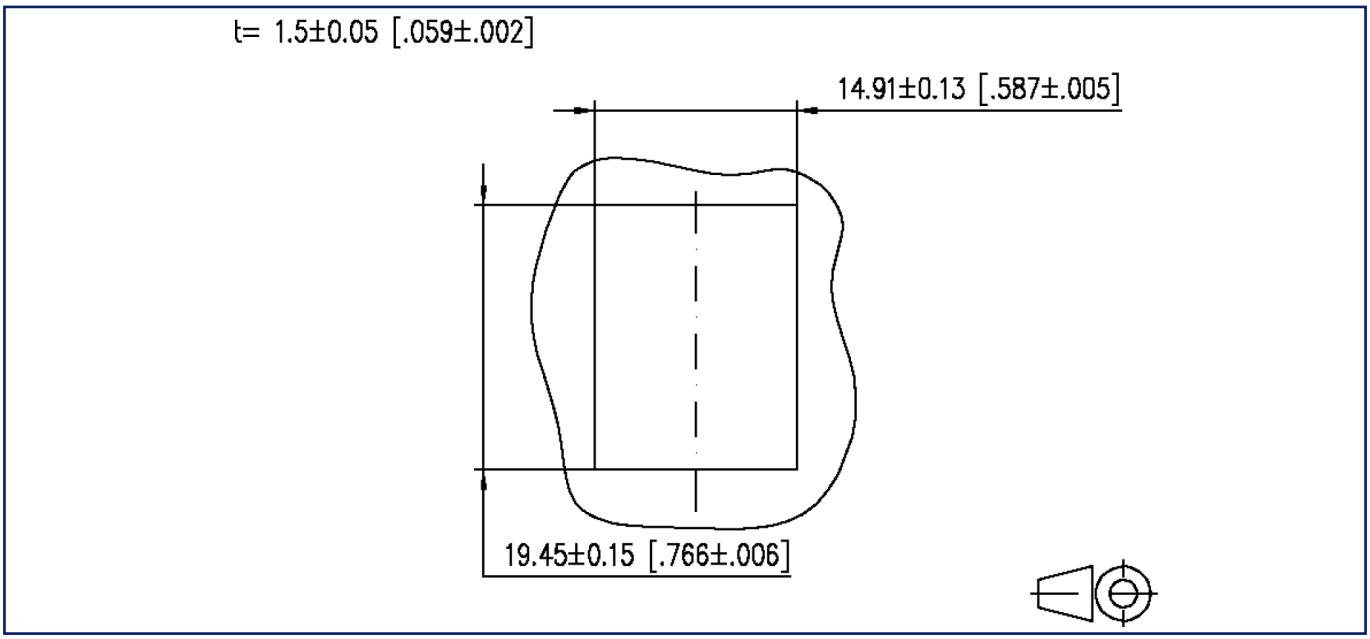

© 2025 METZ CONNECT - Technische Änderungen vorbehalten! Subject to modifications! Sous réserve de modifications techniques!