Data sheet

OpDAT modul LC-Duplex OM3

P/N
15091072-I
EAN 4250184134466
2025/09/18
Version: Y

Illustrations

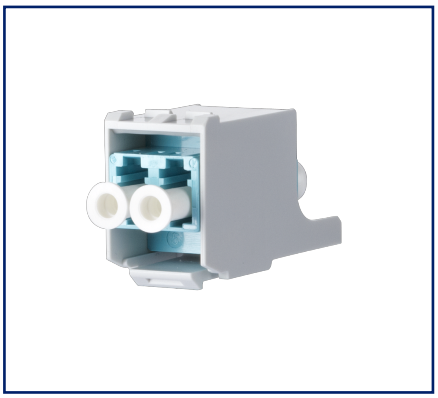

Dimensional drawing

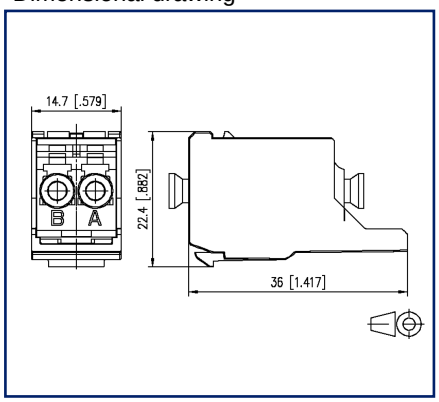

Cut-out

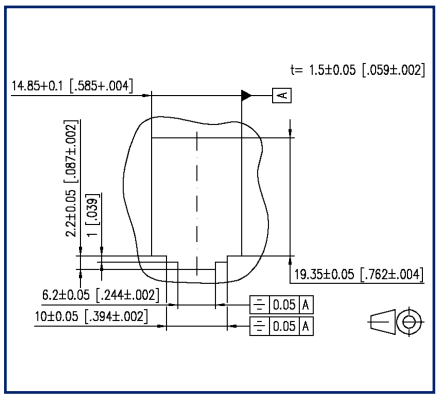

See enlarged drawings at the end of document

Product specification

- LC duplex adapters with adapter, fits Modul applications
- slotted ceramic sleeve for single mode and multi mode applications
- perfect for Fiber-to-the-desk solutions
- service life min. 1000 mating cycles
- Variants: blue (OS2), lime green (OM5), violet (OM4), aqua (OM3), beige (OM2) or green (SM APC)

© 2025 METZ CONNECT - Technische Änderungen vorbehalten! Subject to modifications! Sous réserve de modifications techniques!

Data sheet
OpDAT modul LC-Duplex OM3

P/N
15091072-I
EAN 4250184134466
2025/09/18
Version: Y

Technical Data

General Data	
Fields of application	fiber to the desk
Mechanical measurement according to MICE	M1
Ingress measurement according to MICE	I1
Climatic measurement according to MICE	C1
Electromagnetic measurement according to MICE	E3
Design	coupler / adapter (FO)
Transmission technology	Fiber optic
Color	aqua
Dimensions	
Dimension (L x W x H)	36 mm x 14.7 mm x 22.4 mm
Dimension (L x W x H)	1.417 in. x 0.579 in. x 0.882 in.
Modularity	yes
Mode type of the fiber	Multimode
Labeling option	on housing

Connections/interfaces	
Connector interfaces	LC

Mechanical data	
Cut-out	SC, LC-D, E2000
Connector type	duplex
Mounting method	snap-in function
Life - Number of mating cycles	min. 1000
Position/mounting of latch standard installation position	top

Materials and material properties	
Material - Housing	Plastics
Material - Sleeve	ceramic, slotted
Halogen free	yes
RoHS	compliant

© 2025 METZ CONNECT - Technische Änderungen vorbehalten! Subject to modifications! Sous réserve de modifications techniques!

OpDAT modul LC-Duplex OM3

P/N
15091072-I
EAN 4250184134466
2025/09/18
Version: Y

Technical Data

Standards/Regulations	
Fibre optic connector interfaces	LC - IEC 61754-20

Classifications	
ETIM 7.0	EC000752
ETIM 8.0	EC000752
ETIM 9.0	EC000752
ETIM 10.0	EC000752

Packing details	
Type of packaging	10 pc(s) / box

Application note

This product is a standard product of METZ CONNECT. METZ CONNECT is not aware of the specific intended use of the goods by the Customer or any customers of the Customer. The Customer guarantees that it has fully and sufficiently tested the use of the goods and any product modifications, product changes or product enhancements with regard to the specific intended use in accordance with the state of the art or in any other way. At METZ CONNECT's request, the Customer shall submit and make available meaningful evidence (e.g. test and laboratory protocols, certifications, etc.).

© 2025 METZ CONNECT - Technische Änderungen vorbehalten! Subject to modifications! Sous réserve de modifications techniques!

Data sheet

OpDAT modul LC-Duplex OM3

P/N
15091072-I
EAN 4250184134466
2025/09/18
Version: Y

Accessories from

P/N	Designation
130861-0202-E	Modul surface mount housing 2 port pure white, unequipped
130861-0202KE	Keystone surface mount housing 2 port pure white, unequipped
130861-0302-E	Modul surface mount housing 3 port pure white, unequipped
130861-0302KE	Keystone surface mount housing 3 port pure white, unequipped
130861-0402-E	Modul surface mount housing 4 port pure white, unequipped
130861-0402KE	Keystone surface mount housing 4 port pure white, unequipped
130861-0602-E	Modul surface mount housing 6 port pure white, unequipped
130861-0602KE	Keystone surface mount housing 6 port pure white, unequipped
130861-0802-E	Modul surface mount housing 8 port pure white, unequipped
130861-0802KE	Keystone surface mount housing 8 port pure white, unequipped
130861-1202-E	Modul surface mount housing 12 port pure white, unequipped
130861-1202KE	Keystone surface mount housing 12 port pure white, unequipped
130861-1602-E	Modul surface mount housing 16 port pure white, unequipped
130861-1602KE	Keystone surface mount housing 16 port pure white, unequipped
130861-2402-E	Modul surface mount housing 2x12 port pure white, unequipped
130861-2402KE	Keystone surface mount housing 2x12 port pure white, unequipped
130898018003-E	REGplus IRT-FF COAX F/F
1309107003-E	REGplus IP20 E-DAT modul
1309108003-E	REGplus IP20 FF E-DAT modul K
130910P6-BKKE	E-DAT modul K 24 port 180° 1RU, black
130920-00-E	Modul 19 inches module frame 1RU 24 Port light gray unequipped, shielded
130920-00KE	Keystone 19 inches module frame 1RU 24 port light gray unequipped, shielded
130920-BK-E	Modul 19 inches module frame 1RU 24 port black unequipped, shielded
130920-BKKE	Keystone 19 inches module frame 1RU 24 port black unequipped, shielded
130920-E	E-DAT modul 24x8(8) 1RU patch panel Cat.6_A, light gray
130921-00-E	Modul 19 inches module frame 1RU 24 port stainless steel unequipped
130921-E	E-DAT modul 24x8(8) 1RU patch panel Cat.6_A, stainless steel
130922-00-E	6 port module frame 1RU
130922-02-E	E-DAT modul 6x8(8) 3RU patch panel Cat.6_A
130922-03-E	E-DAT modul 6x8(8) for 1RU patch panel Cat.6_A

© 2025 METZ CONNECT - Technische Änderungen vorbehalten! Subject to modifications! Sous réserve de modifications techniques!

Data sheet

OpDAT modul LC-Duplex OM3

P/N
15091072-I
EAN 4250184134466
2025/09/18
Version: Y

Accessories from

130924-00-E	Modul 19 inches module frame 1.5RU 48 port stainless steel unequipped
130924-E	E-DAT modul 48x8(8) 1.5RU patch panel Cat.6_A, stainless steel
130926-0029KE	Keystone 19 inches module frame 1RU 24 port black unequipped, shielded
130926A0003KE	Keystone 19 inches module frame 1RU 24 port angeled grey unequipped, shielded
130926A0029KE	Keystone 19 inches module frame 1RU 24 port angeled black unequipped, shielded
130926AA029KE	Keystone 19 inch module frame 1RU 24 ports 133° angled, black, unequipped, shielded
130927-1200-E	SmartConnect Patchpanel 12 ports MC module
130927-1200KE	SmartConnect Patchpanel 12 port Keystone, unequipped
130927-1600-E	SmartConnect Patchpanel 16 ports MC module
130927-2400-E	SmartConnect Patchpanel 24 ports MC module
1309426003-E	E-DAT modul REG 1 port IP20 light gray
1309427103-E	Modul REGplus IP20 light gray unequipped
1309428103-E	Keystone REGplus IP20 light gray unequipped
1309470002-I	IP44 surface-mounted module housing with hinged cover and lock, pure white, 2 port unequipped for MC module
1309470002KI	IP44 surface-mounted module housing with hinged cover and lock, pure white, 2 port unequipped for Keystone
1309470003-I	IP44 surface-mounted module housing with hinged cover and lock, gray, 2 port unequipped for MC module
1309470003KI	IP44 surface-mounted module housing with hinged cover and lock, gray, 2 port unequipped for Keystone
1309471002-I	Flush-mounted module housing with hinged cover and lock, pure white, 2 port unequipped for MC module
1309471002KI	Flush-mounted module housing with hinged cover and lock, pure white, 2 port unequipped for Keystone
1309471003-I	Flush-mounted module housing with hinged cover and lock, gray, 2 port unequipped for MC module
1309471003KI	Flush-mounted module housing with hinged cover and lock, gray, 2 port unequipped for Keystone module
1309A07003-E	REGplus IP20 E-DAT modul coupler 180°
1309A17003-E	REGplus IP20 E-DAT modul coupler 90°
130A088003-E	REGplus IP20 FF UTPmodul Cat.5e
130A108003-E	REGplus IP20 FF UTPmodul Cat.6
130A118003-E	REGplus IP20 FF UTPmodul Cat.6_A
130A20-00-E	Keystone 19 inches module frame 1RU 24 port light gray unequipped, unshielded

© 2025 METZ CONNECT - Technische Änderungen vorbehalten! Subject to modifications! Sous réserve de modifications techniques!

Data sheet

OpDAT modul LC-Duplex OM3

P/N
15091072-I
EAN 4250184134466
2025/09/18
Version: Y

Accessories from

130A20-BK-E	Keystone 19 inches module frame 1RU 24 port black unequipped, unshielded
130A21-00-E	Keystone 19 inches module frame 1RU 24 port stainless steel unequipped
130A24-00-E	Keystone 19 inches module frame 1.5RU 48 port stainless steel unequipped
130B10E2E-E	Modul module frame 3RU, 7HP 6 port stainless steel unequipped
130B117003-E	REGplus IP20 $C6_A$modul 180°M
130B11P0-BK-E	$C6_A$modul 24 port 180°M 1RU, black
130B11P0-E	$C6_A$modul 24 port 180°M 1RU, gray
130B11P1-E	$C6_A$modul 24 port 180°M 1RU stainless steel
130B11P4-E	$C6_A$modul 48 port 180°M 1.5RU stainless steel
130B127003-E	REGplus IP20 $C6_A$modul 270°M
130B20E2E-E	Keystone module frame 3RU, 7HP 6 port stainless steel unequipped
130B218003-E	REGplus IP20 FF $C6_A$modul 180°K
130B21P0-BKKE	$C6_A$modul K 24 port 180° 1RU, black
130B228003-E	REGplus IP20 FF $C6_A$modul 270°K
130D2CBU4-E	DCCS2 subassembly 4 port unequipped
130D2CKU4-E	DCCS2 subassembly 4 port unequipped - Keystone
14040000-E	MCO IP69k protective housing for outdoor use, set for exposed installation
14040010-E	MCO IP69k Protective housing for outdoor use, set with mounting bracket
14040100-E	MCO IP69k Protective housing for outdoor use, set wall/ housing bushing
1503600RJ00-B	OpDAT MV hybrid 12xmodule cutouts unequipped IP65
1503600RJ00-E	OpDAT MV hybrid 12xmodule cutouts unequipped IP54
15036ZRJ00-E	OpDAT MV patch panel 12xmodule cutouts unequipped

© 2025 METZ CONNECT - Technische Änderungen vorbehalten! Subject to modifications! Sous réserve de modifications techniques!

OpDAT modul LC-Duplex OM3

P/N
15091072-I
EAN 4250184134466
2025/09/18
Version: Y

Illustrations

Dimensional drawing

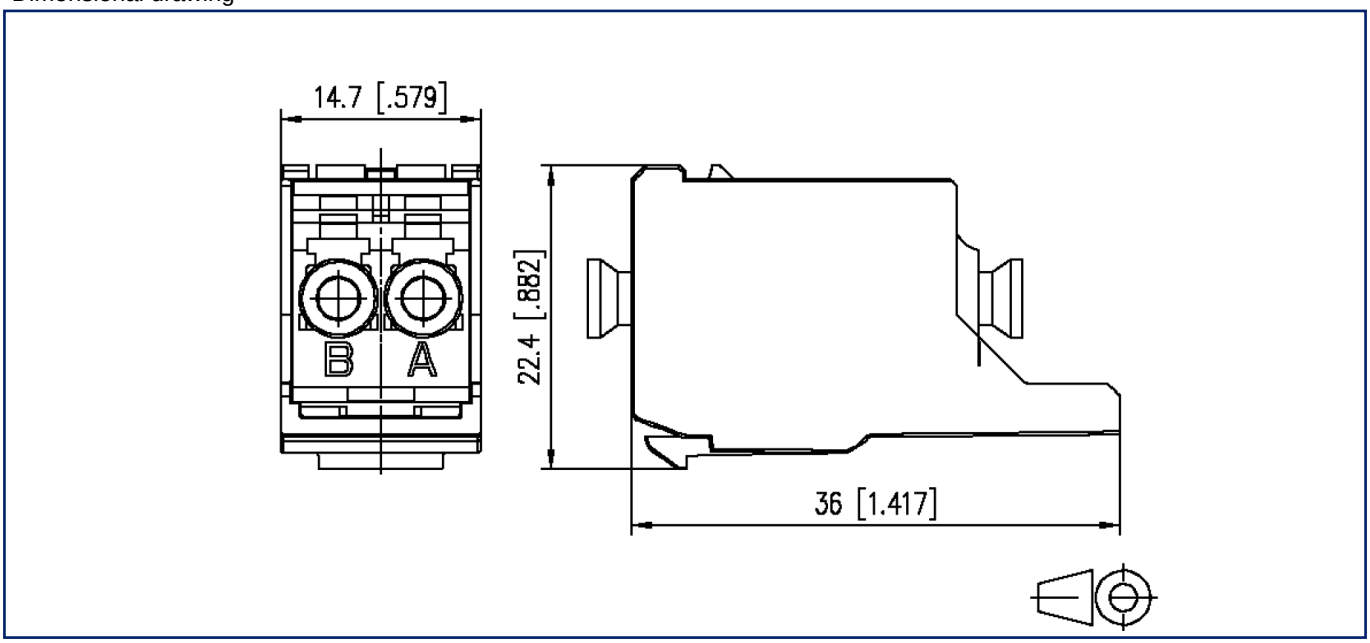

Cut-out

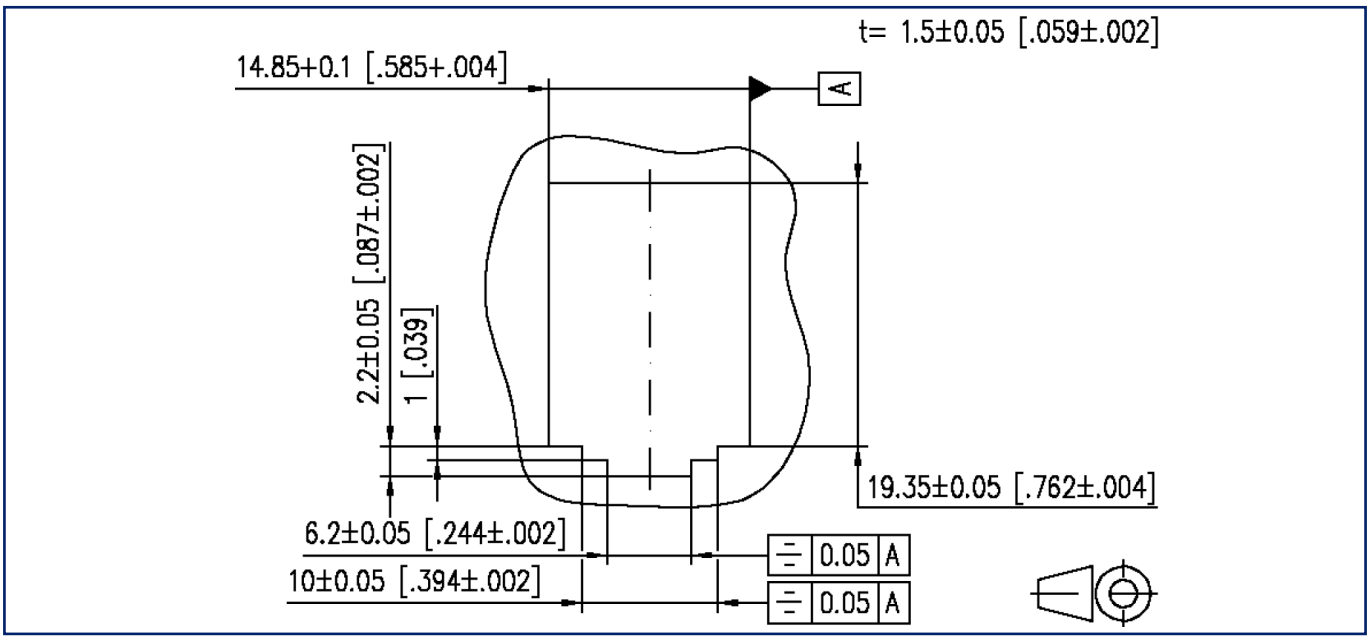

© 2025 METZ CONNECT - Technische Änderungen vorbehalten! Subject to modifications! Sous réserve de modifications techniques!

P/N
15091072-I
EAN 4250184134466
2025/09/18
Version: Y

Illustrations

Cut-out

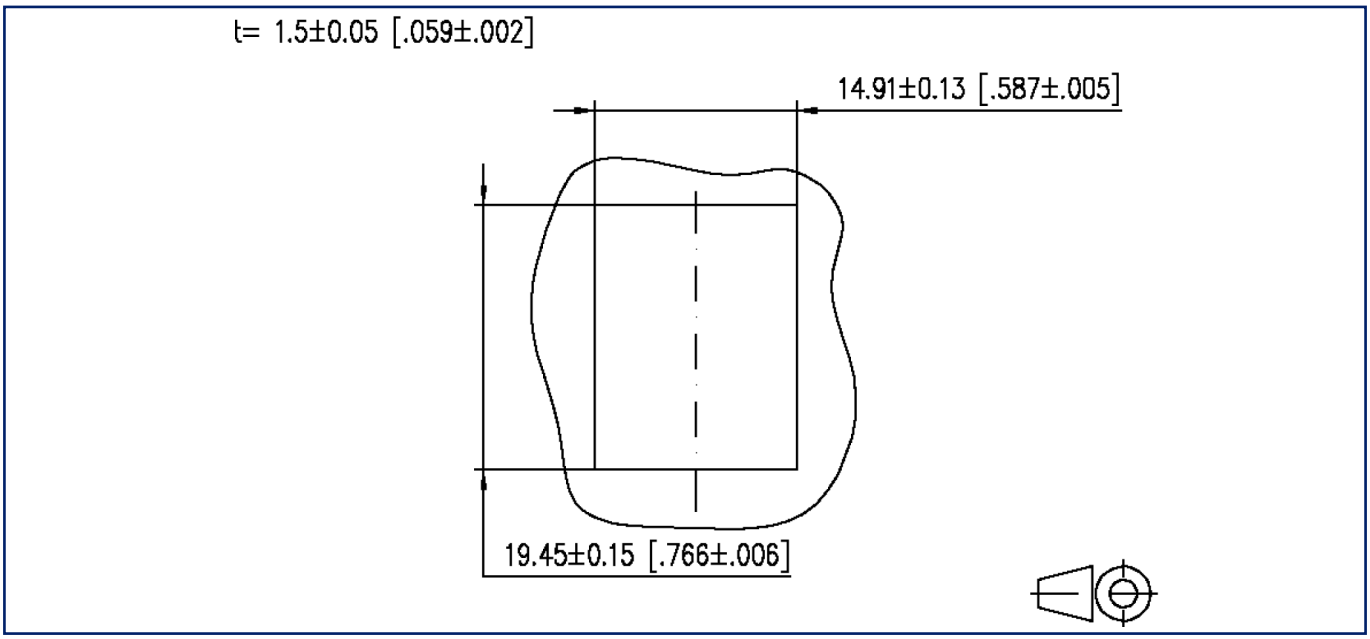

© 2025 METZ CONNECT - Technische Änderungen vorbehalten! Subject to modifications! Sous réserve de modifications techniques!