METZ CONNECT

We realize ideas

Product information – OpDAT CM system

System description

The OpDAT CM system serves to terminate high performing loose tube cables in 19" racks. The possibilities of use range from fixed network cabling to campus cabling up to data center cabling. The modular system allows a gradual expansion depending on the need and expansion of the network. Furthermore, mixed equipment with different connector and fiber types is possible within a system.

Specifications of system components

OpDAT CM Subrack 19“ 3+1RU/84HP

- Aluminum subrack frame (19 inch/3+1RU/84HP) with integrated transfer tray (1RU) to be mounted in 19-inch racks
- Accepts up to 12 compact modules 3RU/7HP with up to 144 ports on 3RU (288 ports by using copmpact modules with 6xLC-Quad)
- Transfer tray to accommodate loose tube excess lengths and to store unused loose tubes, can be pulled-out backwards, with cable manager and 5 cable brackets
- With fastening brakets for loose tubes
- With protection plate for the entry section of the loose tubes
- Fixing dimension: 465 mm (18.307 in.)
- Mounting dimension: WxHxD 19 inch x 4RU x 295 mm (483 x 176 x 295 mm / 19.016 x 6.929 x 11.614 in.)

OpDAT CM Compact modules 3RU/7HP

- Compact modules are ready to mount, prefabricated inserts and serve to terminate loose tubes with 12 or 24 fibers
- Front panel made of silver anodized aluminum, with numbered adapter positions
- Mounting plate made of steel, equipped with splice tray and overlength tray, each with a cover
- Fixing in the subrack by captive screws
- Fully equipped with 12 simplex or 6 duplex adapters and 12 pigtails. Compact modules with 6 LC-Quad adapters have 24 pigtails
- Semi-tight buffered pigtails dia. 0.9 mm, length 2.0 m, 12 colors; inserted and stripped in standard splice tray with crimp splice holder

Accessories Cable gland M20 (Clamping range 7.0 to 12.0 mm)

- Cable gland M
- Best strain relief for cable and wires
- incl. nut
- Material: polyamids
- Color: light gray

Variants

Subrack

Accessories
Cable gland M20
(Clamping range 7.0 to 12.0 mm)

Compact module

SC

SC-D

LC-D

LC-Q

E2000

Order information

Subrack	P/N.
OpDAT CM subrack frame (19 inch/3+1RU/84HP) with integrated transfer tray	1528SBGT19-E

Accessories		P/N.
Cable gland M20 (Clamping range 7.0 to 12.0 mm) › Cable gland M › Best strain relief for cable and wires › incl. nut › Material: polyamids › Color: light gray		150811M20-E
Label strip for cable manager		130894-BS-29-E
Cover plate 3RU/7HP		130810-01-E
Crimp splice protection	Packing Unit 12 pieces	15090401-E

Dimensional drawing

Subrack

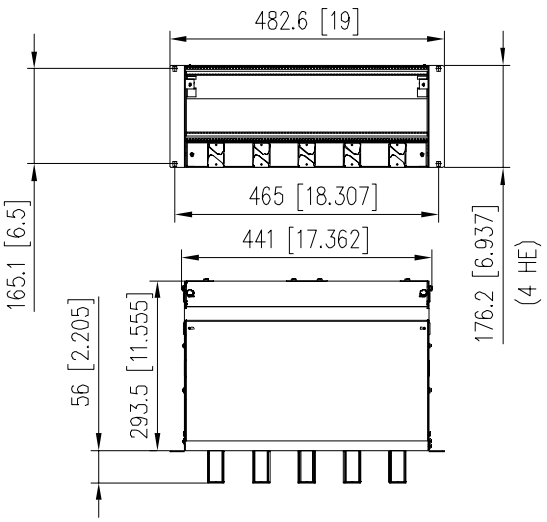

compact module

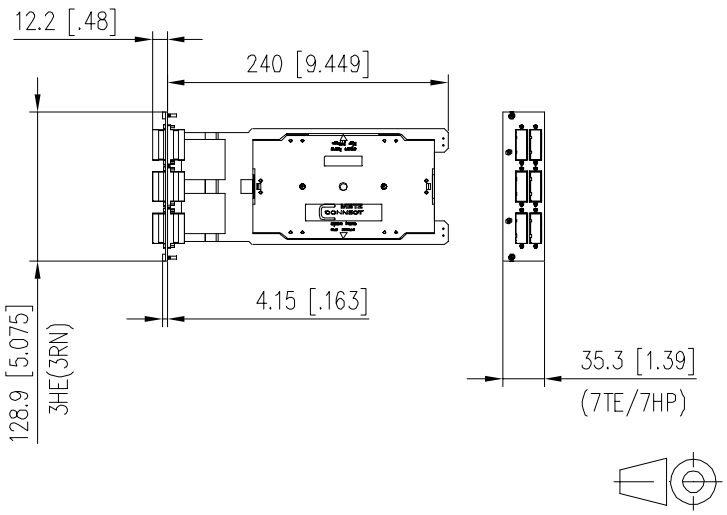

Order information

74	=	LC-D UPC, SM, blue	**BM**	=	SC-D, OM5, lime green
76	=	LC-D APC, SM, green	**BB**	=	SC-D, OM5, violet
7M	=	LC-D APC, OM5, lime green	**BA**	=	SC-D, OM3, aqua
75	=	LC-D, OM4, violet	**D1**	=	ST-D, SM+MM, metal
77	=	LC-D, OM3, aqua	**58**	=	E2000-S UPC, SM, blue
E2	=	SC-D UPC, SM, blue	**59**	=	E2000-S APC, SM, green
F2	=	SC-D APC, SM, green			

7P =LC-D UPC Grade B, SM, blue
7N =LC-D APC Grade B, SM, green
BP =SC-D UPC Grade B, SM, blue
BN =SC-D APC Grade B, SM, green

GRADE B NEW

Adapter type

152 8S X XX XX E

Fiber type

0 = Prefab
9 = OS2 (SM9/125)
5 = OM3 (MM50/125)
7 = OM4 (MM50/125)
8 = OM5

Number of couplers

06 = 6 couplers
12 = 12 couplers

Splice holder

E = Crimp splice holder
S = shring splice holder

METZ CONNECT

We realize ideas

METZ CONNECT GmbH
Im Tal 2
78176 Blumberg
Germany

Phone +49 7702 533-0
Fax +49 7702 533-189

info@metz-connect.com
www.metz-connect.com

METZ CONNECT USA Inc.
200 Tornillo Way
Tinton Falls, NJ 07712
USA
Phone +1-732-389-1300
Fax +1-732-389-9066

METZ CONNECT France SAS
28, Rue Schweighaeuser
67000 Strasbourg
France
Phone +33 3886 17073
Fax +33 3886 19473

METZ CONNECT AUSTRIA GmbH
c/o German chamber of commerce in Austria
Schwarzenbergplatz 5, Top 3/1
1030 Vienna
Austria
Phone +43 1 227 12 64
Fax +43 1 227 12 66

METZ CONNECT Zhongshan Ltd.
Ping Chang Road
Ping Pu Industrial Park
Sanxiang Town
Zhongshan City, 528463
Guangdong Province
China
Phone +86 760 86365055
Fax +86 760 86365050

METZ CONNECT Asia Pacific Ltd.
Suite 1803, 18/F
Chinachem Hollywood Centre,
1 Hollywood Road, Central
Hong Kong
Phone +852 26 027 300
Fax +852 27 257 522

RIA CONNECT BTR NETCOM

07/2020