Data sheet

PC board insert M12, D-coded, 4-pole, green, Tape & Reel

P/N
MMT060A115-G2
EAN 4251394619101
2025/08/27
Version: Q

Illustrations

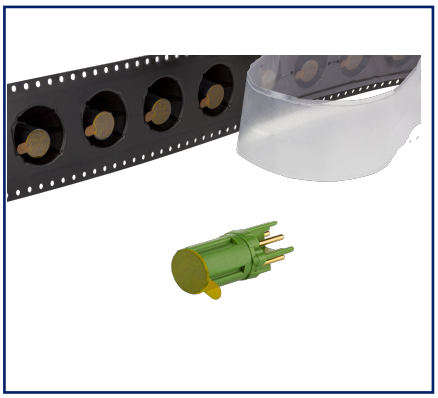

Dimensional drawing

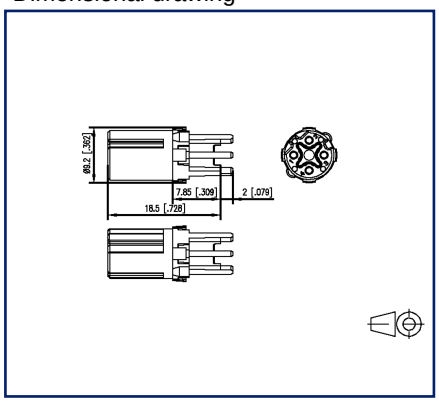

Drill pattern

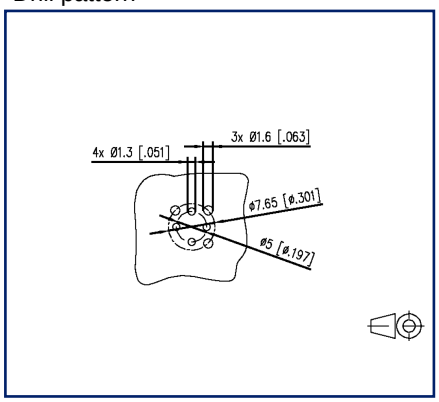

See enlarged drawings at the end of document

Product specification

- PC board insert M12
- Cat.5
- 4-pole, D-coded
- suitable for 10/100 MBit
- THR solderable
- Top entry
- Contact carriers green
- Tape & Reel packaging
- suitable for applications in the railway industry according to data sheet

© 2025 METZ CONNECT - Technische Änderungen vorbehalten! Subject to modifications! Sous réserve de modifications techniques!

METZ CONNECT GmbH | Im Tal 2 | 78176 Blumberg | Germany
Phone +49 7702 533-0 | Fax +49 7702 533-433

Data sheet

PC board insert M12, D-coded, 4-pole, green, Tape & Reel

P/N
MMT060A115-G2
EAN 4251394619101
2025/08/27
Version: Q

Technical Data

General Data	
Dimensions	
Dimension (D x H)	Ø 9.2 mm x 20.5 mm
Dimension (D x H)	0.362 in. x 0.807 in.
Ports	Single port
Coding	D-coded

Electrical characteristics	
Rated voltage	250 V
Effective value of the withstand voltage	1.4 kV
Current carrying capacity at 40 °C	4 A
Insulation resistance	min. 100 MOhm
Overvoltage category	II
Degree of pollution	2
Mechanical data	
Material	
Material - Contact	CuZnPb
Contact surface	Ni + Au
Material - Insulating body	PA UL 94 V0
Color	green
Life - Number of mating cycles	>= 100
Climatic properties	
Temperature - Operating °C	-40 °C - 85 °C
Temperature - Operating °F	-40 °F - 185 °F
Approvals	
Approval mark UL/CSA	E305050
Packaging	
Type of packaging	160 pc(s) / Tape & Reel

© 2025 METZ CONNECT - Technische Änderungen vorbehalten! Subject to modifications! Sous réserve de modifications techniques!

PC board insert M12, D-coded, 4-pole, green, Tape & Reel

P/N
MMT060A115-G2
EAN 4251394619101
2025/08/27
Version: Q

Technical Data

Standards/Regulations

Railway applications	
Electronic equipment used on rolling stock	following to DIN EN 50155
Fire protection on railway vehicles	following to DIN EN 45545-2

Classifications

ETIM 7.0	EC002637
ETIM 8.0	EC002637
ETIM 9.0	EC002637
ETIM 10.0	EC002637

Application note

This product is a standard product of METZ CONNECT. METZ CONNECT is not aware of the specific intended use of the goods by the Customer or any customers of the Customer. The Customer guarantees that it has fully and sufficiently tested the use of the goods and any product modifications, product changes or product enhancements with regard to the specific intended use in accordance with the state of the art or in any other way. At METZ CONNECT's request, the Customer shall submit and make available meaningful evidence (e.g. test and laboratory protocols, certifications, etc.).

© 2025 METZ CONNECT - Technische Änderungen vorbehalten! Subject to modifications! Sous réserve de modifications techniques!

Data sheet

PC board insert M12, D-coded, 4-pole, green, Tape & Reel

P/N
MMT060A115-G2
EAN 4251394619101
2025/08/27
Version: Q

Illustrations

Dimensional drawing

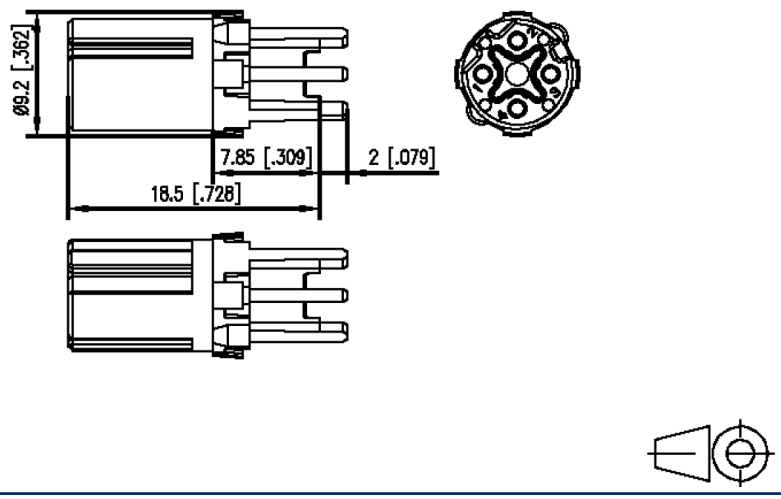

Drill pattern

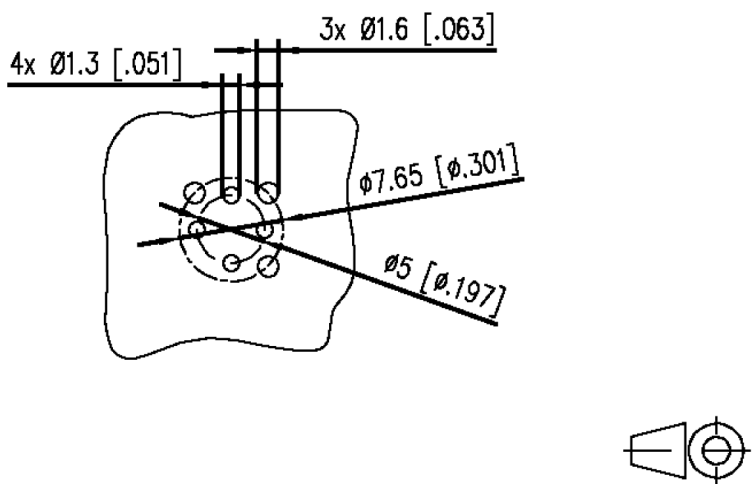

METZ CONNECT GmbH | Im Tal 2 | 78176 Blumberg | Germany
Phone +49 7702 533-0 | Fax +49 7702 533-433
Weitere Dokumentation siehe / additional documentation see / documentation supplémentaire voir www.metz-connect.com

© 2025 METZ CONNECT - Technische Änderungen vorbehalten! Subject to modifications! Sous réserve de modifications techniques!

PC board insert M12, D-coded, 4-pole, green, Tape & Reel

P/N
MMT060A115-G2
EAN 4251394619101
2025/08/27
Version: Q

Illustrations

Snap-in geometry

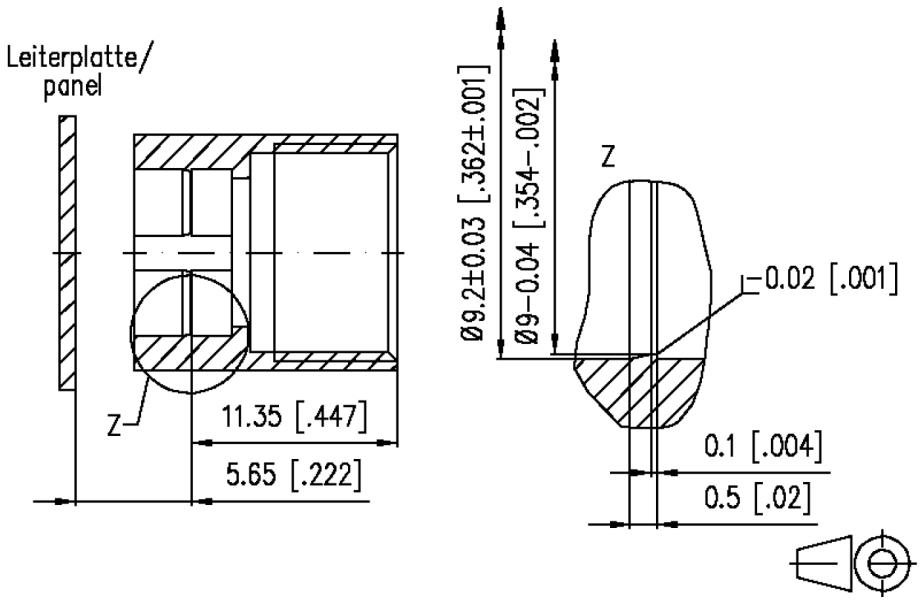

© 2025 METZ CONNECT - Technische Änderungen vorbehalten! Subject to modifications! Sous réserve de modifications techniques!