Data sheet

OpDAT adapter LC-Duplex APC OS2

P/N
15090076-I
EAN 4250184146919
2025/09/18
Version: AF

Illustrations

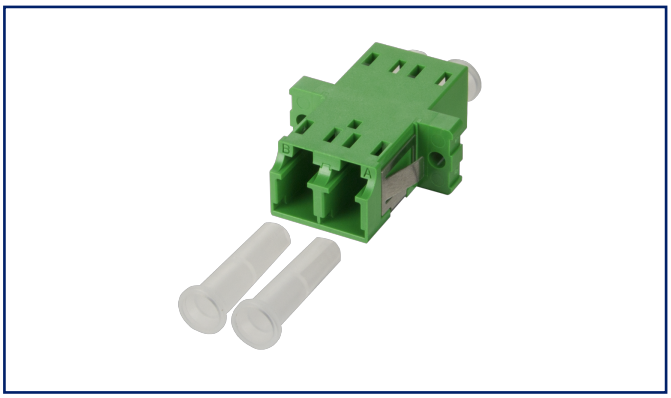

Dimensional drawing

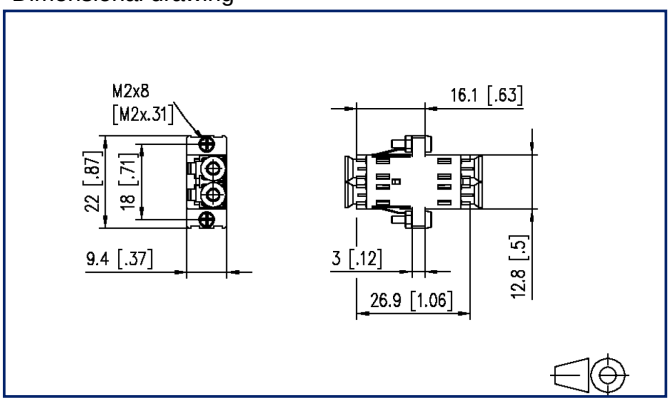

See enlarged drawings at the end of document

Product specification

- LC duplex plastic adapter, SC simplex design with metal clip
- slotted ceramic guide sleeves for single mode and multimode applications
- with transparent dust protection caps for a better visibility during red light test
- high material stability, surface quality and durability
- durability min. 1000 mating cycles with a ceramic guide sleeve
- screws and nuts included

- variants: blue (OS2), green (OS2 APC), lime green (OM5), violet (OM4), aqua (OM3), each variant available in packing units of 1 piece or 50 pieces

© 2025 METZ CONNECT - Technische Änderungen vorbehalten! Subject to modifications! Sous réserve de modifications techniques!

Data sheet

OpDAT adapter LC-Duplex APC OS2

P/N
15090076-I
EAN 4250184146919
2025/09/18
Version: AF

Technical Data

General Data	
Fields of application	structured building cabling fiber to the desk data center
Mechanical measurement according to MICE	M1
Ingress measurement according to MICE	I1
Climatic measurement according to MICE	C1
Electromagnetic measurement according to MICE	E3
Design	coupler / adapter (FO)
Transmission technology	Fiber optic
Color	green
Dimensions	
Dimension (L x W x H)	29.2 mm x 12.8 mm x 9.4 mm
Dimension (L x W x H)	1.15 in. x 0.504 in. x 0.37 in.
Mode type of the fiber	Singlemode
Shape	APC (Angled Physical Contact)
Labeling option	on housing

Connections/interfaces	
Connector interfaces	LC

Mechanical data	
Cut-out	SC, LC-D, E2000
Connector type	duplex
Mounting method	latchable and screwable
Life - Number of mating cycles	min. 1000
Position/mounting of latch standard installation position	top

Materials and material properties	
Material - Housing	Plastics
Material - Sleeve	ceramic, slotted
Halogen free	yes
RoHS	compliant

© 2025 METZ CONNECT - Technische Änderungen vorbehalten! Subject to modifications! Sous réserve de modifications techniques!

OpDAT adapter LC-Duplex APC OS2

P/N
15090076-I
EAN 4250184146919
2025/09/18
Version: AF

Technical Data

Standards/Regulations	
Fibre optic connector interfaces	LC - IEC 61754-20

Classifications	
ETIM 7.0	EC000752
ETIM 8.0	EC000752
ETIM 9.0	EC000752
ETIM 10.0	EC000752

Packing details	
Type of packaging	1 pc(s) / plastic bag

Application note

This product is a standard product of METZ CONNECT. METZ CONNECT is not aware of the specific intended use of the goods by the Customer or any customers of the Customer. The Customer guarantees that it has fully and sufficiently tested the use of the goods and any product modifications, product changes or product enhancements with regard to the specific intended use in accordance with the state of the art or in any other way. At METZ CONNECT's request, the Customer shall submit and make available meaningful evidence (e.g. test and laboratory protocols, certifications, etc.).

© 2025 METZ CONNECT - Technische Änderungen vorbehalten! Subject to modifications! Sous réserve de modifications techniques!

P/N
15090076-I
EAN 4250184146919
2025/09/18
Version: AF

Accessories from

P/N	Designation
14040000-E	MCO IP69k protective housing for outdoor use, set for exposed installation
14040010-E	MCO IP69k Protective housing for outdoor use, set with mounting bracket
14040100-E	MCO IP69k Protective housing for outdoor use, set wall/ housing bushing
1501100002-E	OpDAT 4 UP for 4xSC-S/LC-D/E2-S/ST
1501120002-E	OpDAT 4 AP for 4xSC-S/LC-D/E2-S/ST
1502007300-E	OpDAT PF patch panel for 24xLC-D/SC-S/E2000-S
1502200200-E	OpDAT PA patch panel unequipped for 24xLC-D/SC-S/E2000, gray
15024A0200-E	OpDAT REGpro front cover for 12xE2000/12xSC-S
15024A7700-E	OpDAT REGpro front cover for 6xLC-D/SC-S/E2000
1502507300-E	OpDAT fix patch panel for 24xLC-D/SC-S/E2000
1502607300-E	OpDAT slide patch panel for 24xLC-D/SC-S/E2000
1503097603-E	Consolidation Point splice 3xLC-D APC OS2 (ceramic, green), pigtails placed
15036Z7300-E	OpDAT MV patch panel 9xLC-D/SC-S/E2000-S unequipped

© 2025 METZ CONNECT - Technische Änderungen vorbehalten! Subject to modifications! Sous réserve de modifications techniques!

Data sheet

OpDAT adapter LC-Duplex APC OS2

P/N
15090076-I
EAN 4250184146919
2025/09/18
Version: AF

Illustrations

Dimensional drawing

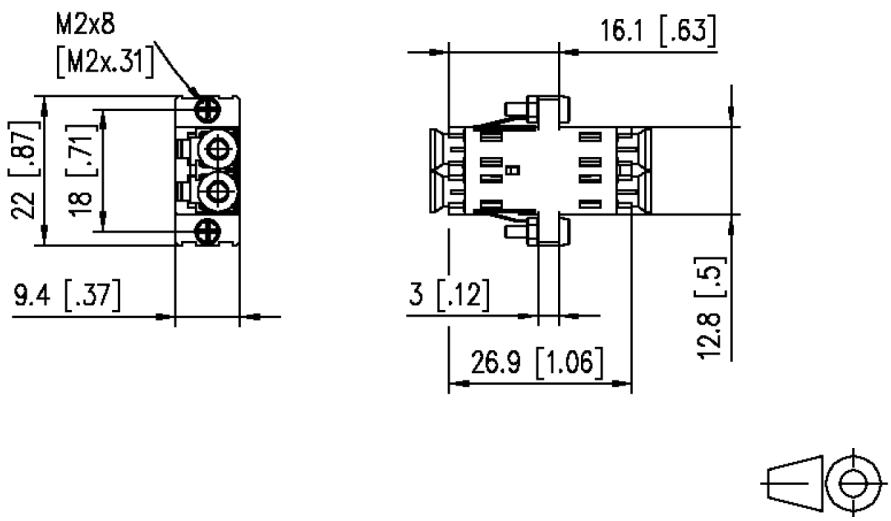

© 2025 METZ CONNECT - Technische Änderungen vorbehalten! Subject to modifications! Sous réserve de modifications techniques!