Data sheet

OpDAT adapter SC-Duplex MM (metal)

P/N
15090052-I
EAN 4250184109501
2025/09/18
Version: Z

Illustrations

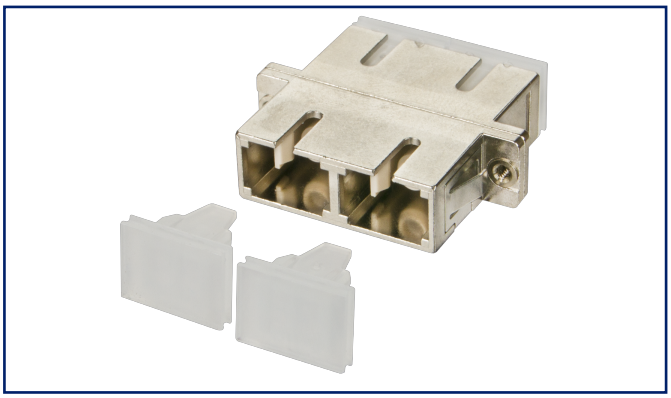

Dimensional drawing

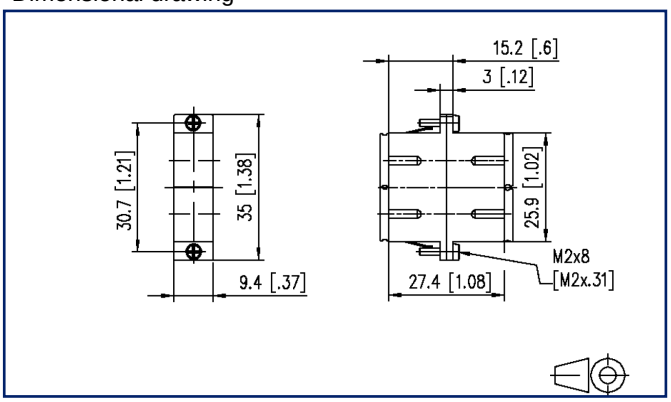

See enlarged drawings at the end of document

Product specification

- SC duplex adapter made of zinc die-cast
- slotted ceramic guide sleeves for singlemode and multimode applications
- with transparent dust protection caps for a better visibility during red light test
- high material stability, surface quality and durability
- durability min. 1000 mating cycles
- screws included

- variants: SC-D (SM or MM), SC-D APC (SM), packing units of 1 piece or 30 pieces

© 2025 METZ CONNECT - Technische Änderungen vorbehalten! Subject to modifications! Sous réserve de modifications techniques!

METZ CONNECT GmbH | Im Tal 2 | 78176 Blumberg | Germany
Phone +49 7702 533-0 | Fax +49 7702 533-433

Data sheet

OpDAT adapter SC-Duplex MM (metal)

P/N
15090052-I
EAN 4250184109501
2025/09/18
Version: Z

Technical Data

General Data	
Fields of application	structured building cabling fiber to the desk data center
Mechanical measurement according to MICE	M1
Ingress measurement according to MICE	I1
Climatic measurement according to MICE	C1
Electromagnetic measurement according to MICE	E3
Design	coupler / adapter (FO)
Transmission technology	Fiber optic
Color	metallike
Dimensions	
Dimension (L x W x H)	25.6 mm x 27.3 mm x 9.4 mm
Dimension (L x W x H)	1.008 in. x 1.075 in. x 0.37 in.
Mode type of the fiber	Multimode
Labeling option	on housing

Connections/interfaces	
Connector interfaces	SC

Mechanical data	
Cut-out	SC-D, LC-Q, ST-D
Connector type	duplex
Mounting method	latchable and screwable
Life - Number of mating cycles	min. 1000

Materials and material properties	
Material - Housing	GD-Zn
Material - Sleeve	ceramic, slotted
Halogen free	yes
RoHS	compliant

© 2025 METZ CONNECT - Technische Änderungen vorbehalten! Subject to modifications! Sous réserve de modifications techniques!

OpDAT adapter SC-Duplex MM (metal)

P/N
15090052-I
EAN 4250184109501
2025/09/18
Version: Z

Technical Data

Environmental conditions	
Temperature (min. - max.)	
Temperature - Storage °C	-40 °C - 90 °C
Temperature - Storage °F	-40 °F - 194 °F
Temperature - Operating °C	-40 °C - 85 °C
Temperature - Operating °F	-40 °F - 185 °F
Standards/Regulations	
Fibre optic connector interfaces	SC - IEC 61754-4
Classifications	
ETIM 7.0	EC000752
ETIM 8.0	EC000752
ETIM 9.0	EC000752
ETIM 10.0	EC000752

Packing details	
Type of packaging	1 pc(s) / plastic bag

Application note

This product is a standard product of METZ CONNECT. METZ CONNECT is not aware of the specific intended use of the goods by the Customer or any customers of the Customer. The Customer guarantees that it has fully and sufficiently tested the use of the goods and any product modifications, product changes or product enhancements with regard to the specific intended use in accordance with the state of the art or in any other way. At METZ CONNECT's request, the Customer shall submit and make available meaningful evidence (e.g. test and laboratory protocols, certifications, etc.).

© 2025 METZ CONNECT - Technische Änderungen vorbehalten! Subject to modifications! Sous réserve de modifications techniques!

OpDAT adapter SC-Duplex MM (metal)

P/N
15090052-I
EAN 4250184109501
2025/09/18
Version: Z

Accessories from

P/N	Designation
1502005200-E	OpDAT PF patch panel for 12xSC-D/LC-Q/ST-D
1502205200-E	OpDAT PA patch panel for 12xSC-D/LC-Q/ST-D
150240000010E	OpDAT REGplus for 6xSC-Duplex for crimp splice holder
150240000010S	OpDAT REGplus for 6xSC-Duplex for shrink splice holder
15024A5200-E	OpDAT REGpro front cover for 6xSC-D/6xLC-Q
150250B200-E	OpDAT fix patch panel for 24xSC-D/LC-Q/ST-D
150260B200-E	OpDAT slide patch panel for 24xSC-D/LC-Q/ST-D
15036Z1B00-E	OpDAT MV patch panel 18xSC-S unequipped

© 2025 METZ CONNECT - Technische Änderungen vorbehalten! Subject to modifications! Sous réserve de modifications techniques!

OpDAT adapter SC-Duplex MM (metal)

P/N
15090052-I
EAN 4250184109501
2025/09/18
Version: Z

Illustrations

Dimensional drawing

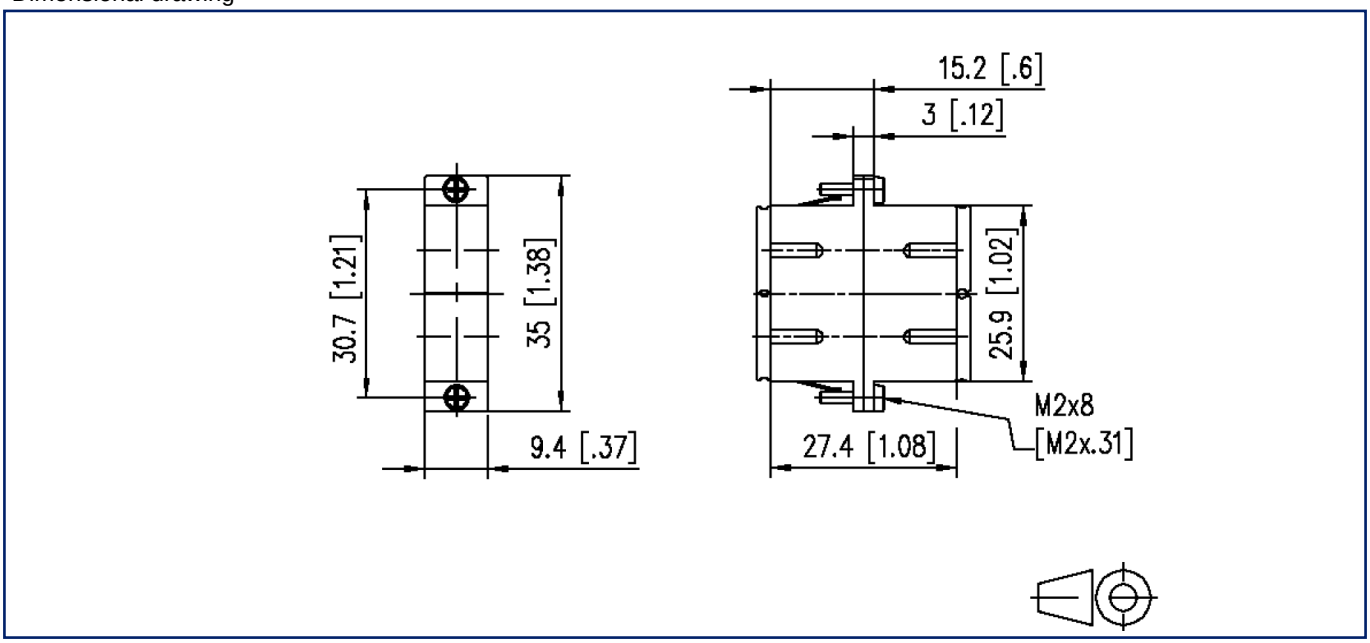

© 2025 METZ CONNECT - Technische Änderungen vorbehalten! Subject to modifications! Sous réserve de modifications techniques!