Data sheet

OpDAT Simplex adapter ST SM+MM

P/N
15090001-I
EAN 4250184109440
2025/09/18
Version: AA

Illustrations

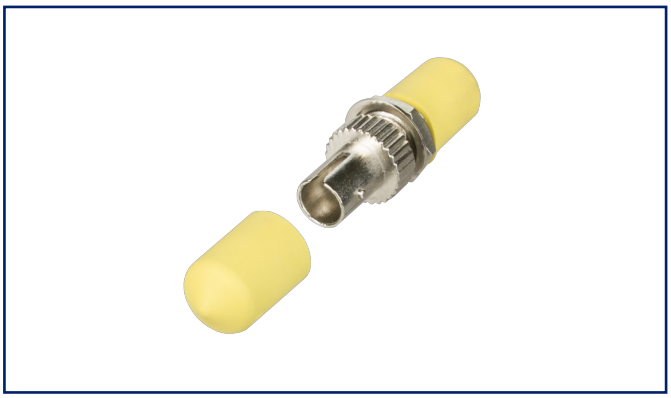

Dimensional drawing

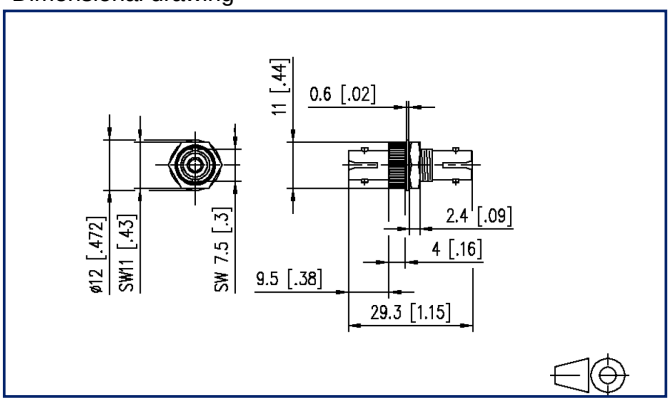

See enlarged drawings at the end of document

Product specification

- ST simplex adapter made of zinc die-cast
- slotted ceramic guide sleeve for single mode and multimode applications
- high material stability, surface quality and durability
- durability min. 1000 mating cycles
- screws included

- variants: packing units of one piece or 100 pieces

© 2025 METZ CONNECT - Technische Änderungen vorbehalten! Subject to modifications! Sous réserve de modifications techniques!

METZ CONNECT GmbH | Im Tal 2 | 78176 Blumberg | Germany
Phone +49 7702 533-0 | Fax +49 7702 533-433

Data sheet

OpDAT Simplex adapter ST SM+MM

P/N
15090001-I
EAN 4250184109440
2025/09/18
Version: AA

Technical Data

General Data	
Fields of application	structured building cabling fiber to the desk data center
Mechanical measurement according to MICE	M1
Ingress measurement according to MICE	I1
Climatic measurement according to MICE	C1
Electromagnetic measurement according to MICE	E3
Design	coupler / adapter (FO)
Transmission technology	Fiber optic
Color	metallike
Dimensions	
Dimension (L x W x H)	29 mm x 11 mm x 11 mm
Dimension (L x W x H)	1.142 in. x 0.433 in. x 0.433 in.
Mode type of the fiber	Singlemode + Multimode

Connections/interfaces	
Connector interfaces	ST

Mechanical data	
Cut-out	ST
Connector type	simplex
Life - Number of mating cycles	min. 1000

Materials and material properties	
Material - Housing	GD-Zn
Material - Sleeve	ceramic, slotted
Halogen free	yes
RoHS	compliant

Standards/Regulations	
Fibre optic connector interfaces	ST - IEC 61754-2

© 2025 METZ CONNECT - Technische Änderungen vorbehalten! Subject to modifications! Sous réserve de modifications techniques!

OpDAT Simplex adapter ST SM+MM

P/N
15090001-I
EAN 4250184109440
2025/09/18
Version: AA

Technical Data

Classifications

ETIM 7.0	EC000752
ETIM 8.0	EC000752
ETIM 9.0	EC000752
ETIM 10.0	EC000752

Packing details

Type of packaging	1 pc(s) / plastic bag

Application note

This product is a standard product of METZ CONNECT. METZ CONNECT is not aware of the specific intended use of the goods by the Customer or any customers of the Customer. The Customer guarantees that it has fully and sufficiently tested the use of the goods and any product modifications, product changes or product enhancements with regard to the specific intended use in accordance with the state of the art or in any other way. At METZ CONNECT's request, the Customer shall submit and make available meaningful evidence (e.g. test and laboratory protocols, certifications, etc.).

© 2025 METZ CONNECT - Technische Änderungen vorbehalten! Subject to modifications! Sous réserve de modifications techniques!

P/N
15090001-I
EAN 4250184109440
2025/09/18
Version: AA

Accessories from

P/N	Designation
1501100002-E	OpDAT 4 UP for 4xSC-S/LC-D/E2-S/ST
1501120002-E	OpDAT 4 AP for 4xSC-S/LC-D/E2-S/ST
1502000100-E	OpDAT PF patch panel for 24xST-S
1502200100-E	OpDAT PA patch panel for 24xST-S
15024A0100-E	OpDAT REGpro front cover for 12xST

© 2025 METZ CONNECT - Technische Änderungen vorbehalten! Subject to modifications! Sous réserve de modifications techniques!

OpDAT Simplex adapter ST SM+MM

P/N
15090001-I
EAN 4250184109440
2025/09/18
Version: AA

Illustrations

Dimensional drawing

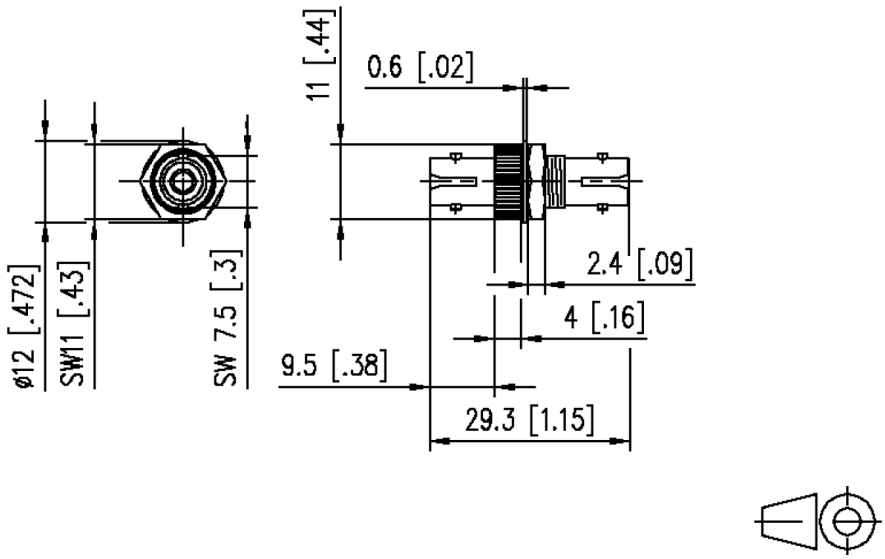

© 2025 METZ CONNECT - Technische Änderungen vorbehalten! Subject to modifications! Sous réserve de modifications techniques!