Data sheet

OpDAT Industry IP67 V14 bulkhead normative mounting + LC-D MM adapter insert

P/N 1402393320ME
EAN 4250184123644
2025/09/17
Version: Z

Illustrations

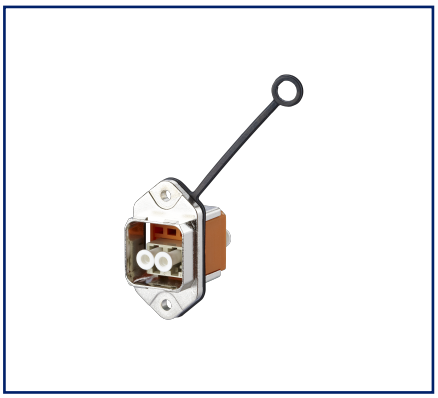

Dimensional drawing

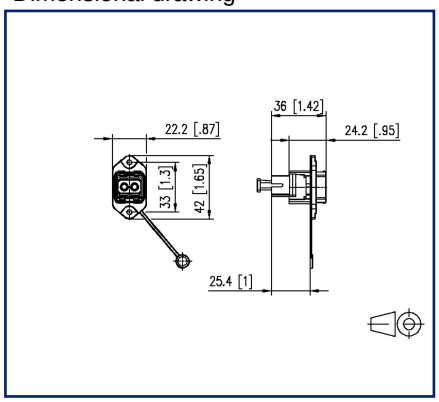

Cut-out

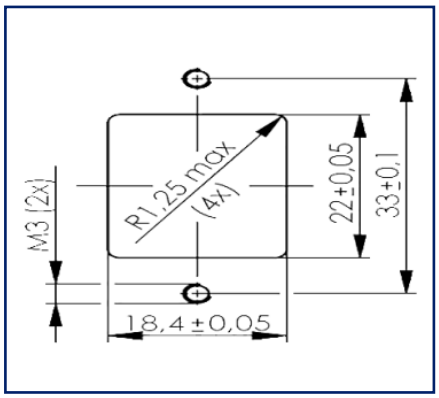

See enlarged drawings at the end of document

Product specification

- flange with push-pull-lock acc. to ISO/IEC 24702 and IEC 61076-3-117 var. 14
- fiber optic cable adapter made of plastic
- slotted zirconium oxide ceramics sleeve (ZrO2) for single mode applications
- slotted metal sleeve (Ph-Br) for multi mode applications
- compliance with EN 50173-1 or ISO/IEC 24702 with regard to the limits for insertion loss
- flame-retardant and halogen-free plastic housing and adapter dust covers
- easy to mount due to standard fastening by means of two screws (M3)
- mounting from the front
- industry-compatible metal housing with improved durability
- flammability class as per UL 94V-0
- improved resistance to chemical substances
- variants: LC-D and SC-RJ/2SC - blue (SM) and beige (MM)

© 2025 METZ CONNECT - Technische Änderungen vorbehalten! Subject to modifications! Sous réserve de modifications techniques!

METZ CONNECT GmbH | Im Tal 2 | 78176 Blumberg | Germany
Phone +49 7702 533-0 | Fax +49 7702 533-433

Data sheet

OpDAT Industry IP67 V14 bulkhead normative mounting + LC-D MM adapter insert

P/N
1402393320ME
EAN 4250184123644
2025/09/17
Version: Z

Technical Data

General Data	
Fields of application	harsh environment
Mechanical measurement according to MICE	M1
Ingress measurement according to MICE	I1
Climatic measurement according to MICE	C1
Electromagnetic measurement according to MICE	E3
Design	coupler / adapter (FO)
Mounting style	front side
Transmission technology	Fiber optic
Color	metallike
Color protective housing	metallike
Dimensions	
Dimension (L x W x H)	27.7 mm x 22.2 mm x 42 mm
Dimension (L x W x H)	1.091 in. x 0.874 in. x 1.654 in.
Mode type of the fiber	Multimode

Connections/interfaces	
Protective housing interface 1	V14
Protective housing interface 2	V14
Connector interfaces	LC

Mechanical data	
Cut-out	SC, LC-D, E2000
Connector type	duplex
Mounting method	with screws
Mounting style	front side
Life - Number of mating cycles	min. 500

Materials and material properties	
Material - Housing	Plastics
Material - Protective housing	metal
Material - Sleeve	CuSnP
Material - Supporting body finish	Ni (nickel)
Material - Dust protection	flame retardant and halogen free
Halogen free	yes

© 2025 METZ CONNECT - Technische Änderungen vorbehalten! Subject to modifications! Sous réserve de modifications techniques!

OpDAT Industry IP67 V14 bulkhead normative mounting + LC-D MM adapter insert

P/N
1402393320ME
EAN 4250184123644
2025/09/17
Version: Z

Technical Data

Materials and material properties	
RoHS	compliant

Environmental conditions	
Particulate ingress	IP6X with protective housing
Liquid ingress/immersion	IPX7 with protective housing
Increased chemical resistance	yes
General information	This product is suitable for use in industrial environments inside buildings with IPxy protection class according to DIN EN 60529 specified in this data sheet. Not specified for outdoor applications.

Standards/Regulations	
Generic cabling systems	
Industrial area	ISO/IEC 24702 AMD 1 | DIN EN 50173-3 ANSI/TIA-1005
Degrees of Protection Provided by Enclosures	IEC 60529:2014-09
Connectors for electronic equipment	
Rectangular connectors	DIN EN 61076-3-117
Fibre optic connector interfaces	LC - IEC 61754-20

Classifications	
ETIM 7.0	EC002598
ETIM 8.0	EC002598
ETIM 9.0	EC002598
ETIM 10.0	EC002598

Packing details	
Type of packaging	10 pc(s) / box

Application note

This product is a standard product of METZ CONNECT. METZ CONNECT is not aware of the specific intended use of the goods by the Customer or any customers of the Customer. The Customer guarantees that it has fully and sufficiently tested the use of the goods and any product modifications, product changes or product enhancements with regard to the specific intended use in accordance with the state of the art or in any other way. At METZ CONNECT's request, the Customer shall submit and make available meaningful evidence (e.g. test and laboratory protocols, certifications, etc.).

© 2025 METZ CONNECT - Technische Änderungen vorbehalten! Subject to modifications! Sous réserve de modifications techniques!

OpDAT Industry IP67 V14 bulkhead normative mounting + LC-D MM adapter insert

P/N
1402393320ME
EAN 4250184123644
2025/09/17
Version: Z

Accessories

P/N	Designation
1401088102KI	E-DAT Industry IP67 V14 flange protection cap

© 2025 METZ CONNECT - Technische Änderungen vorbehalten! Subject to modifications! Sous réserve de modifications techniques!

OpDAT Industry IP67 V14 bulkhead normative mounting + LC-D MM adapter insert

P/N
1402393320ME
EAN 4250184123644
2025/09/17
Version: Z

Illustrations

Dimensional drawing

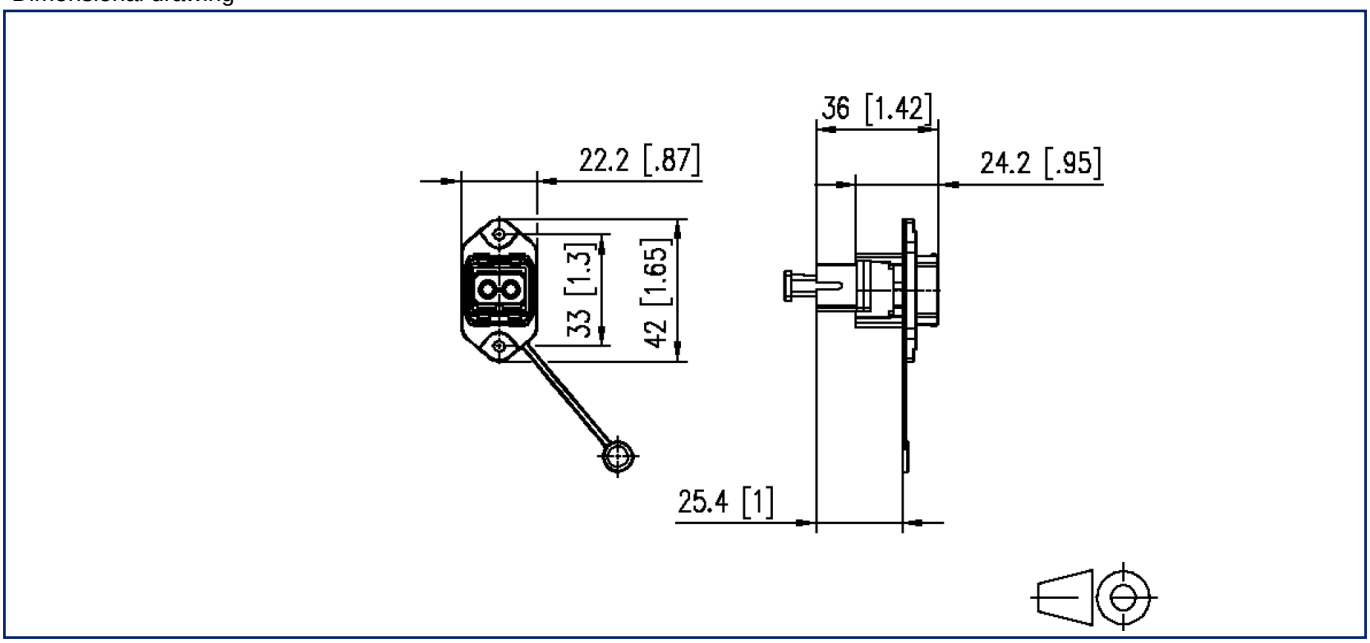

Cut-out

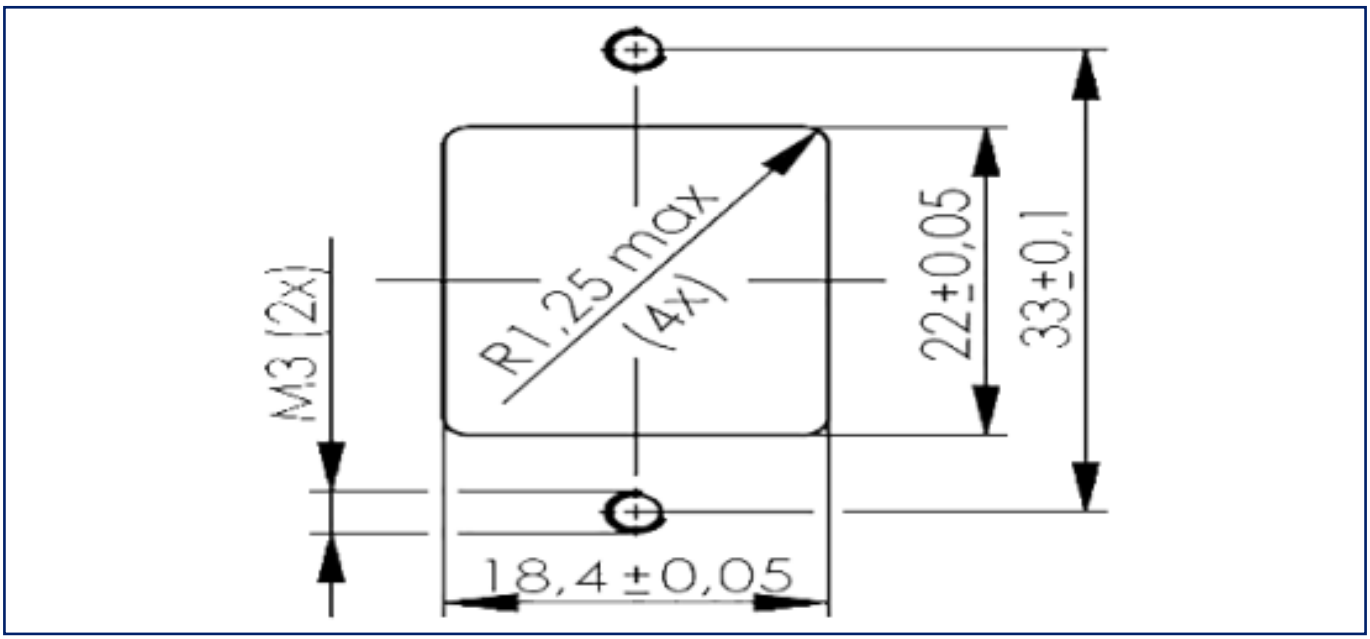

METZ CONNECT GmbH | Im Tal 2 | 78176 Blumberg | Germany
Phone +49 7702 533-0 | Fax +49 7702 533-433

© 2025 METZ CONNECT - Technische Änderungen vorbehalten! Subject to modifications! Sous réserve de modifications techniques!